DEVELOPMENT BANK OF THE PHILIPPINES
Head Office: Sen. Gil J. Puyat Avenue corner
Makati Avenue, Makati City, Philippines

BAGONG PILIPINAS

REQUEST FOR QUOTATION

The Development Bank of the Philippines, through the Regional Bids and Awards Committee for BBG Southern Luzon, intends to procure the following goods/general support services:

Quantity	Unit of Measurement	Project Description	Approved Budget for the Contracts (ABCs), VAT inclusive
One (1)	Lot	Procurement of Supply and Delivery of Woodworks and Specialties for DBP Narra Branch	PhP 338,751.00

Accordingly, all interested suppliers are invited to submit their Price Quotation using the prescribed DBP Financial Proposal Form together with the following mandatory requirements:

☑ Valid Mayor's/Business Permit
☑ PhilGEPS Registration Number and/or PhilGEPS Certificate of Membership
☐ Annual Income or Business Tax Return *(for Project with ABC above P 500 K)*
[Electronically filed through the BIR Electronic Filing and Payment System (eFPS) could be accepted]
☑ Omnibus Sworn Statement *(for Project with ABC above P 50 K)*
☐ Valid Philippine Contractors Accreditation Board (PCAB) License & Category [Appropriate for the nature and cost of the project] *(Applicable for Infrastructure Projects only)*
☐ Duly accomplished Bill of Quantities *(Applicable for Infrastructure Projects only)*
☑ DBP Terms & Conditions and Technical Specifications/Terms of Reference duly signed by supplier or duly authorized representative
☑ Data Privacy Consent Form

The Bank reserves the right to reject any or all Financial Proposals, to waive any formality therein, and to annul the procurement process at any time prior to contract award without incurring any liability to the affected suppliers. Furthermore, the Bank makes no assurance that a contract shall be awarded as a result of this request.

For further information and details on the requirements, please refer to the attached PhilGEPS Publication.

Thank you.

Bids and Awards Committee Secretariat
Development Bank of the Philippines
Ground Floor DBP Building, Merchan Street,
Barangay IX, Lucena City, Quezon Province, Philippines 4301
Telephone: (02) 8189511 local 1581; (042) 373-0190 Email: slbg@dbp.ph

PhilGEPS
Philippine Government Electronic Procurement System
Central Portal for Philippine Government Procurement Oppurtunities

Help

Bid Notice Abstract

Request for Quotation (RFQ)

Reference Number	12625728
Procuring Entity	DEVELOPMENT BANK OF THE PHILIPPINES - BBG - SOUTH LUZON
Title	Procurement of Supply and Delivery of Woodworks and Specialties for DBP Narra Branch
Area of Delivery	Palawan

Solicitation Number:	2025-011 RFQ	**Status**	**Active**
Trade Agreement:	Implementing Rules and Regulations		
Procurement Mode:	Negotiated Procurement - Small Value Procurement (Sec. 53.9)	**Associated Components**	5
Classification:	Goods	**Bid Supplements**	0
Category:	Fixtures		
Approved Budget for the Contract:	PHP 338,751.00	**Document Request List**	0
Delivery Period:	30 Day/s		
Client Agency:			
		Date Published	26/11/2025
Contact Person:	Dolly Ann de Chavez Llagas Administrative Specialist Ground Floor, DBP Bldg., Merchan St., Lucena City Quezon Province Lucena City Quezon Philippines 4301 63-2-88189511 Ext.1542 63-42-3730297 dadllagas@dbp.ph	**Last Updated / Time**	26/11/2025 00:00 AM
		Closing Date / Time	02/12/2025 05:00 AM

Description

The Development Bank of the Philippines – BBG Southern Luzon, through the Regional Bids and Awards Committee for Southern Luzon (RBAC-SL), intends to procure supply and delivery of woodworks and specialties for DBP Narra Branch with an Approved Budget for the Contract (ABC) of Three Hundred Thirty-eight Thousand Seven Hundred Fifty-one Pesos Only (₱338,751).

Interested suppliers/contractors are invited to submit their Financial Proposals, duly signed by their authorized representative/s, on or before the deadline indicated. Submissions must be accompanied by the following mandatory requirements:

1. Valid Mayor's/Business Permit
2. Electronically Filed Income or Business Tax Return (filed through the BIR Electronic Filing and Payment System [eFPS]); or Annual Income or Business Tax Return
3. PhilGEPS Certificate of Registration
4. Omnibus Sworn Statement
5. Valid Philippine Contractors Accreditation Board (PCAB) License and registration for the type and cost of contract (for Infrastructure Projects only)
6. Duly accomplished Bill of Quantities (for Infrastructure Projects only)
7. DBP Terms and Conditions and Technical Specifications/Terms of Reference, duly signed on each and every page by the supplier or duly authorized representative
8. DBP Data Privacy Consent Form

The Bank assumes no responsibility whatsoever to compensate or indemnify any supplier for expenses incurred in the preparation and submission of the Financial Proposal and/or mandatory requirements.

Further, the Bank reserves the right to reject any or all Financial Proposals, declare a failure of bidding, or not award the contract at any time prior to contract award, without thereby incurring any liability to the affected bidder/s.

Line Items

Item No.	Product/Service Name	Description	Quantity	UOM	Budget (PHP)
1	Woodworks and Specialties	Supply and Delivery of Woodworks and Specialties for DBP Narra Branch	1	Lot	338,751.00

Created by Dolly Ann de Chavez Llagas

Date Created 25/11/2025

The PhilGEPS team is not responsible for any typographical errors or misinformation presented in the system. PhilGEPS only displays information provided for by its clients, and any queries regarding the postings should be directed to the contact person/s of the concerned party.

© 2004-2025 DBM Procurement Service. All rights reserved.

DBP FINANCIAL PROPOSAL FORM

For: Development Bank of the Philippines

On behalf of the supplier, the undersigned, declare that:

a. We have examined the Request for Quotation and its attachments (collectively, "RFQ")
b. We, submit the following quotation/s:

Project Description	Approved Budget for the Contracts (ABCs), VAT inclusive	Total Bid Price, VAT Inclusive (in Figures and in Words)	
		Unit Price	Amount
Supply and Delivery of Woodworks and Specialties for DBP Narra Branch	PhP 338,751.00		
TOTAL AMOUNT IN WORDS:			

c. We undertake, if our Quotation/Proposal for the Price is accepted, to deliver the good(s) in accordance with the delivery schedule specified in the Request for Quotation;
d. We agree to abide by this Quotation/Proposal for the Price Validity Period of Six (6) Months from date of opening of Financial Proposals and it shall remain binding upon us and may be accepted at any time before the expiration of that period;
e. Until a formal Purchase Order is prepared and executed, this Financial Proposal, together with your written acceptance thereof, shall be binding upon us;
f. We understand that you are not bound to accept the Lowest Calculated Quotation or any Quotation/Proposal you may receive;
g. We likewise certify/confirm that the undersigned is the duly authorized representative of the supplier and granted full power and authority to do, execute, and perform any and all acts necessary to participate, submit the Financial Proposal, and to sign and execute the ensuing contract for herein project;
h. We acknowledge that failure to sign each page of this Financial Proposal Form, shall be aground for the rejection of our Quotation/Proposal;
i. We acknowledge that we indicated the amount of our total bid price in figures and in words;
j. We acknowledge that Quotations/ Proposals not addressing of providing all of the required items in the Bidding Documents including, where applicable, bill of quantities, shall be considered non-responsive and, thus, automatically disqualified. In this regard, where a required item is provided, but no price is indicated, the same shall be considered as non-responsive, but specifying a "0" (zero) or "-" (dash) for the said item would mean that it is being offered for free to the government, except those required by law or regulations to be provided for. (Sec 32.2.1(a), Rule IX, IRR). It is further understood that to ensure completeness of the quotation/proposal, suppliers must ensure that ALL items, columns or matrices in the prescribed forms are appropriately filled-up and no item. Column, or matrix is left blank; and
k. We understand that any communication sent by DBP to the address/fax number/email address provided below shall be deemed to have been duly received by your firm. On the date and time shown in the transmittal. Any change in the contact details shall be duly communicated to the bank.

_____
Signature over Printed Name of the Supplier's Authorized Representative/Designation

PhilGEPS Registration Number:_____

_____
Name of Company/Business Name

_____
Address

Telephone No. : _____
Cellphone No. : _____
Email Address : _____
Date : _____

DEVELOPMENT BANK OF THE PHILIPPINES

PRIVACY CONSENT FORM
Bids/Procurement

Name of Project	Supply and Delivery of Woodworks and Specialties for DBP Narra Branch

I, _____, *(Address)* _____, *(Contact Number)* _____, *(Email Address)* _____ hereby authorize/consent to the processing of personal and other related business information which I voluntarily provided to the **Development Bank of the Philippines (DBP)** and understand, acknowledge and agree to the following specific purposes and terms:

I authorize DBP for ***processing***[1] and using my personal and other related business information, including but not limited to my name, address, contact details, and any other relevant information necessary for the evaluation process.

I understand that appropriate security measures shall be implemented by DBP for the protection of my personal and other related business information and shall be treated confidentially. Similarly, such information shall only be disclosed to authorized personnel involved in the bids and awards process of DBP.

I acknowledge that my personal and other related business information may be retained by DBP for as long as deemed necessary to fulfill the purposes specified/stated in this consent form, or as required by applicable policies, laws or regulations.

I understand that I have the right to access and request correction of my personal and other related business information held by DBP to correct any error and inaccuracy, in accordance with applicable data privacy laws.

I understand that I have the right to withdraw my consent, and request DBP to stop the ***processing*** of my personal and business information which may cease/ terminate/ discontinue the evaluation and other related procurement processes.

I agree that any confidential information obtained during my participation in the bid and procurement procedures shall not be disclosed to any third party other than its intended purpose.

By signing below, I acknowledge that I have read and understood the terms and purposes of this consent form and agree to the ***processing*** of my personal and other related business information as described.

_____
Signature over Printed Name

_____
Date Signed

ADDITIONAL INFORMATION

For inquiries or complaints, you may contact the Development Bank of the Philippines (DBP), Attention to: the **DBP Data Protection Officer or the DBP Customer Experience Management Department**, Sen. Gil J. Puyat Ave. cor. Makati Ave., Makati City, Philippines, Telephone No. (02) 8818-9511 to 20/ (02) 8818-9611 to 20, email: info@dbp.ph.

[1]**PROCESSING** - refers to any operation or any set of operations performed upon personal data including but not limited to, the collection, recording, organization, storage, updating or modification, retrieval, consultation, use, consolidation, blocking, erasure or destruction of data.

Development Bank of the Philippines

PROJECT : SUPPLY AND DELIVERY OF WOODWORKS AND SPECIALTIES FOR DBP NARRA BRANCH
LOCATION : PUERTO PRINCESA NATIONAL ROAD, POBLACION, NARRA PUERTO PRINCESA, IV-B MIMAROPA
SUBJECT : TECHNICAL SPECIFICATIONS

MODE OF PROCUREMENT: SMALL VALUE PROCUREMENT

I. APPROVED BUDGET FOR THE CONTRACT:

THREE HUNDRED THIRTY-EIGHT THOUSAND SEVEN HUNDRED FIFTY-ONE and 00/100 PESOS - Php 338,751.00 (inclusive of VAT/applicable taxes)

II. TECHNICAL SPECIFICATIONS:

Item No.	Particulars	Quantity	Specifications
WOOD WORKS AND SPECIALTIES (PREFABRICATED MODULE INCLUSIVE OF ALL ACCESSORIES)			
1	Teller counter - high counter inclusive of furnishings	3 sets	20mm thick plywood carcass / framing, synthetic granite finish & stainless steel baseboard. Complete with rubber mat and all acrylic module forms and picos tray See ANNEX A – Teller's Counter
2	NAC counter - low counter inclusive of furnishings	2 sets	20mm thick plywood carcass / framing, synthetic granite finish & stainless steel baseboard. See ANNEX B – New Accounts Counter
3	Guard's podium	1 set	20mm thick plywood carcass / framing. See ANNEX C for details.
4	Sand Box	1 set	20mm thick plywood carcass / framing See ANNEX D for details.
5	Forms counter	1 set	20mm thick plywood carcass / framing,

			tempered glass, stainless steel baseboard See ANNEX E for details.
6	Server Table *see actual length	1 set	20mm thick plywood carcass / framing. See ANNEX F for details.
7	Back Table	1 set	20mm thick plywood carcass / framing, backpainted glass, stainless steel support See ANNEX G for details.
8	Typing Table	1 set	20mm thick plywood carcass / framing and HPL countertop See ANNEX H for details .
9	Money Counter Module	1 set	20mm thick plywood carcass / framing and caster. See ANNEX I for details
10	Poster Stand	1 set	20mm thick plywood carcass / framing, acrylic holders and decals. See ANNEX J for details
11	Phenolic Boards (PD-1), Self-Supporting Compact Decorative Laminates complete with nylon accessories and lock indicator including phenolic partitions	1 set	Door Dimensions: 1700mm (H) x 600mm (W) Phenolic Dimensions: 2000mm (H) x 1170mm (W) Waterproof / multi-resistant 12mm thick phenolic partition in laminate finish complete with nylon accessories and framings See ANNEX K for details.
12	Wooden Pole with Base	2 sets	See Annex L for details.

	inclusive of Flag		DBP logo dimensions: 6" length x 6" width x 1/2" thickness Pole dimensions: 2" dia., height for verification Pole and base material and finish: Wood/Semi-gloss white paint Philippine flag dimensions: 70" length x 30" height DBP flag dimensions: 70" length x 30" width

III. CONDITIONS OF THE CONTRACT:

1. The Supplier shall ensure that the items delivered are in accordance with the specifications required by the DBP. DBP reserves the right to reject delivery if the item/s delivered are found to be defective or do not meet the required specifications/model.

2. DBP may terminate/cancel the Purchase Order (PO)/Notice to Proceed (NTP) when if the Supplier fails to deliver, perform and comply with its obligation.

3. **Delivery Period:** The Supplier shall complete the supply and delivery of woodworks and specialties within **thirty (30) calendar days** after receipt of Purchase Order (PO) / Notice to Proceed (NTP).

4. **Point of Delivery:** Puerto Princesa National Road, Poblacion, Narra, Puerto Princesa, IV-B MIMAROPA.

5. **Warranty:** The warranty period shall be one (1) year from the date of acceptance of the item/s by DBP.

IV. DOCUMENTARY REQUIREMENTS:

Interested Supplier/s must submit the following documents:

- Proposal/Quotation
- Proof PhilGEPS Registration
- 2025 Mayor's/Business Permit
- Omnibus Sworn Statement
- Secretary Certificate (for Supplier under Partnership/Corporation)
- Signed Request for Quotation (RFQ)

V. PAYMENT:

ONE-TIME, FULL PAYMENT shall be processed be after completion of the project subject to submission of following complete documents:

- Project Pictures
- Invoice/Billing Statement
- Certificate of Completion/Acceptance (as applicable)

VI. LIQUIDATED DAMAGES:

The supplier, manufacturer, or distributor shall deliver the goods procured within the period as specified in the Contract.

Liquidated damages shall be imposed if any or all of the contracted Goods remain undelivered on the specified date, including the duly granted extensions.

When the supplier, manufacturer, or distributor fails to satisfactorily deliver the goods under the contract within the specified delivery schedule, inclusive of duly granted time extensions, if any, the supplier, manufacturer, or distributor shall be liable for liquidated damages in an amount equal to one-tenth (1/10) of one percent (1%) of the cost of the delayed goods scheduled for delivery for every day of delay until such goods are finally delivered and accepted by the Procuring Entity. The Procuring Entity need not prove that it has incurred actual damages to be entitled to liquidated damages. Such amount shall be deducted from any money due, or which may become due the supplier, manufacturer, or distributor, or collected from any securities or warranties posted by the supplier, manufacturer, or distributor, whichever is convenient to the Procuring Entity. In case the total sum of liquidated damages reaches ten percent (10%) of the total contract price, the Procuring Entity may rescind the contract and impose appropriate sanctions over and above the liquidated damages to be paid.

If delays are likely to be incurred beyond its control, the supplier, manufacturer, or distributor shall promptly notify the Procuring Entity in writing, providing details of the causes and duration of the expected delay. The Procuring Entity may, at its discretion, grant a time extension based on meritorious grounds, with or without the imposition of liquidated damages.

Recommended by:

SM ERICK M. VALIDO
Officer-In-Charge, CFMD-PCMU
Per Office Order No. 325 dated 14 July 2025

Approved by:

SAVP ALBERTO SANTIAGO A. BERMEJO
Officer-In-Charge, CFMD
Per Sector Order No. 513 dated 20 August 2025

ANNEX A

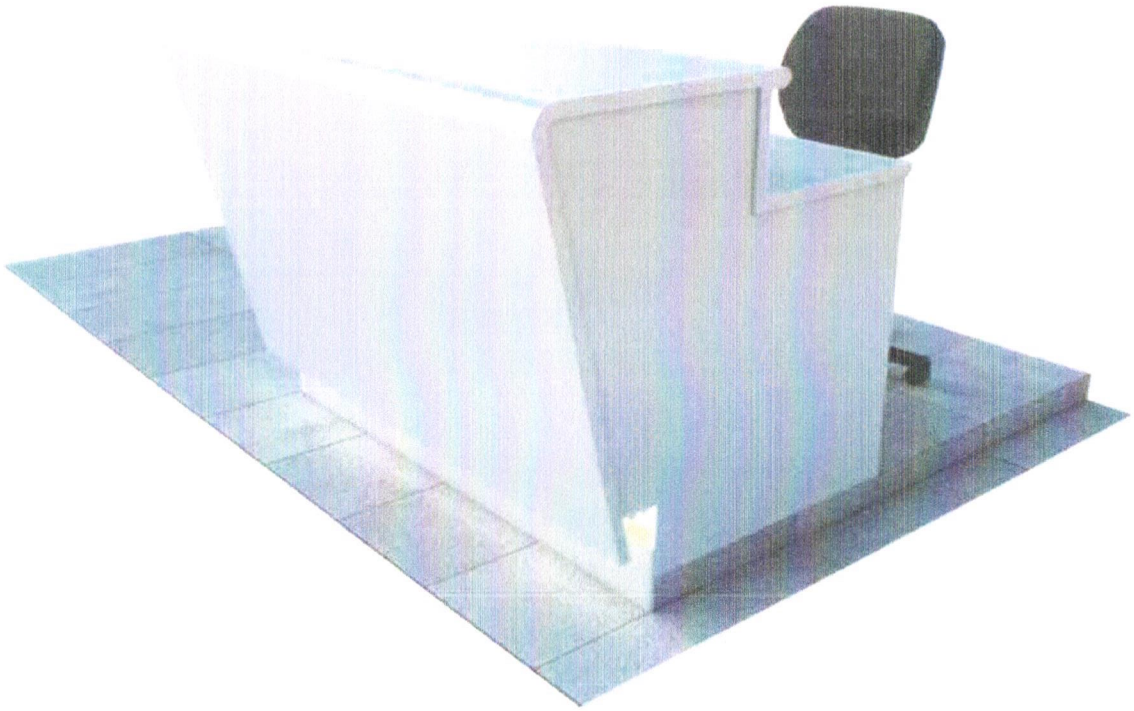

PERSPECTIVE

DBP We Build Possibilities.	DBP NARRA BRANCH	TELLER'S COUNTER (1400mm MODULE) DETAILS

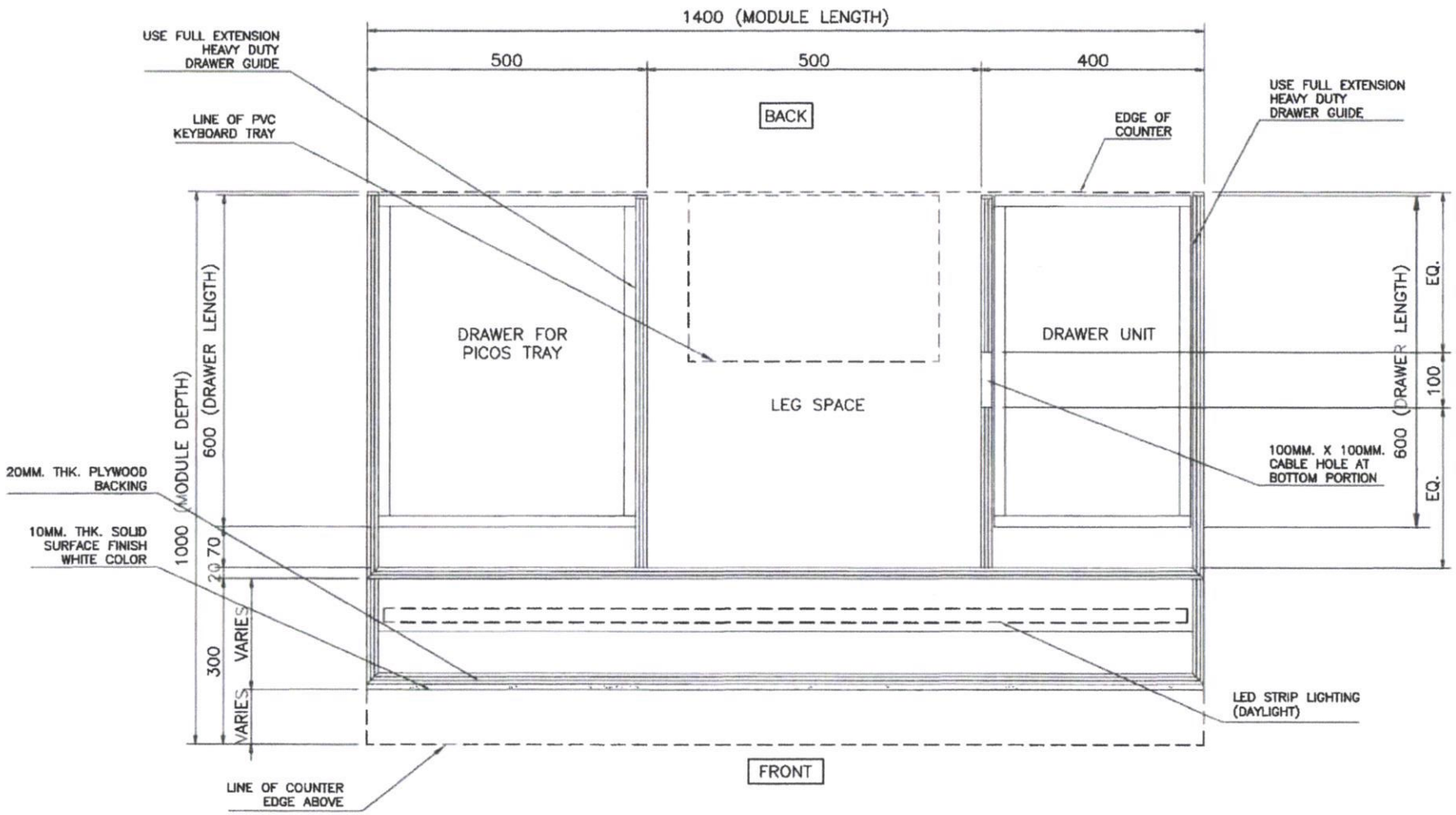

BOTTOM PLAN

DBP We Build Possibilities.	DBP NARRA BRANCH	TELLER'S COUNTER (1400mm MODULE) DETAILS

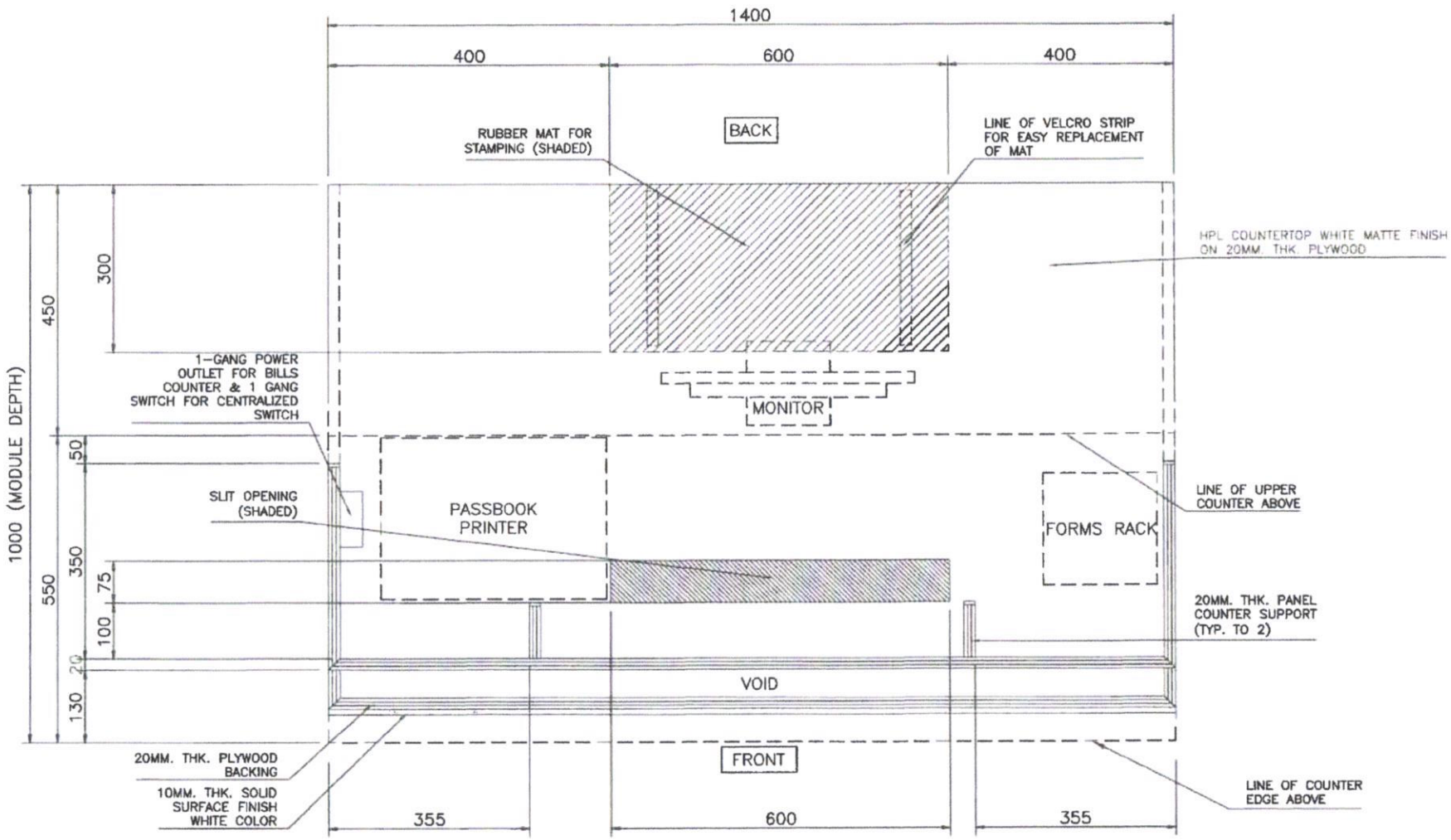

LOWER COUNTERTOP PLAN

We Build Possibilities.

DBP NARRA BRANCH

TELLER'S COUNTER (1400mm MODULE) DETAILS

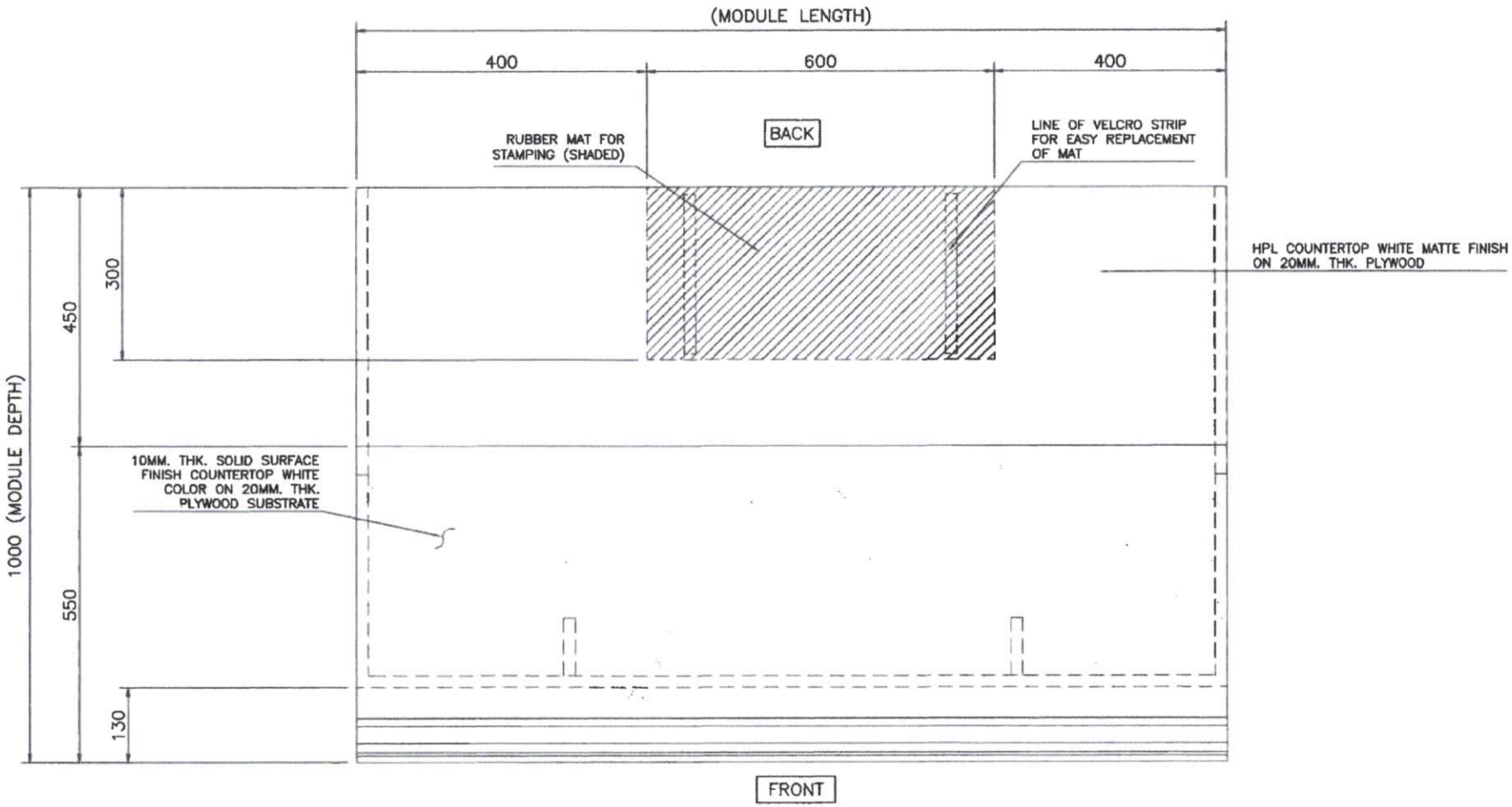

UPPER COUNTERTOP PLAN

DBP We Build Possibilities.	DBP NARRA BRANCH	TELLER'S COUNTER (1400mm MODULE) DETAILS

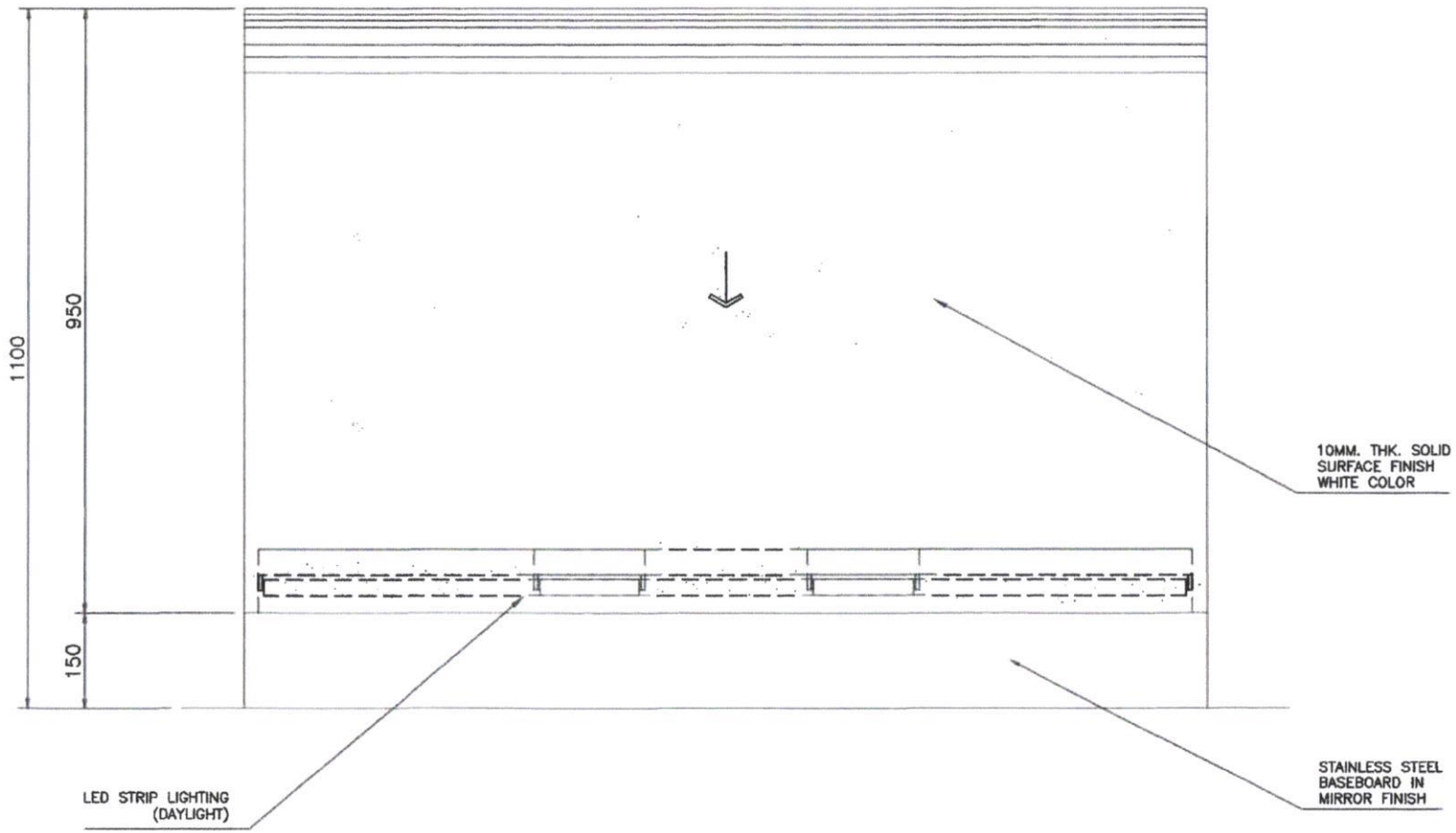

LEGEND :

↓ SLOPE DIRECTION

FRONT ELEVATION

We Build Possibilities.

DBP NARRA BRANCH

TELLER'S COUNTER (1400mm MODULE) DETAILS

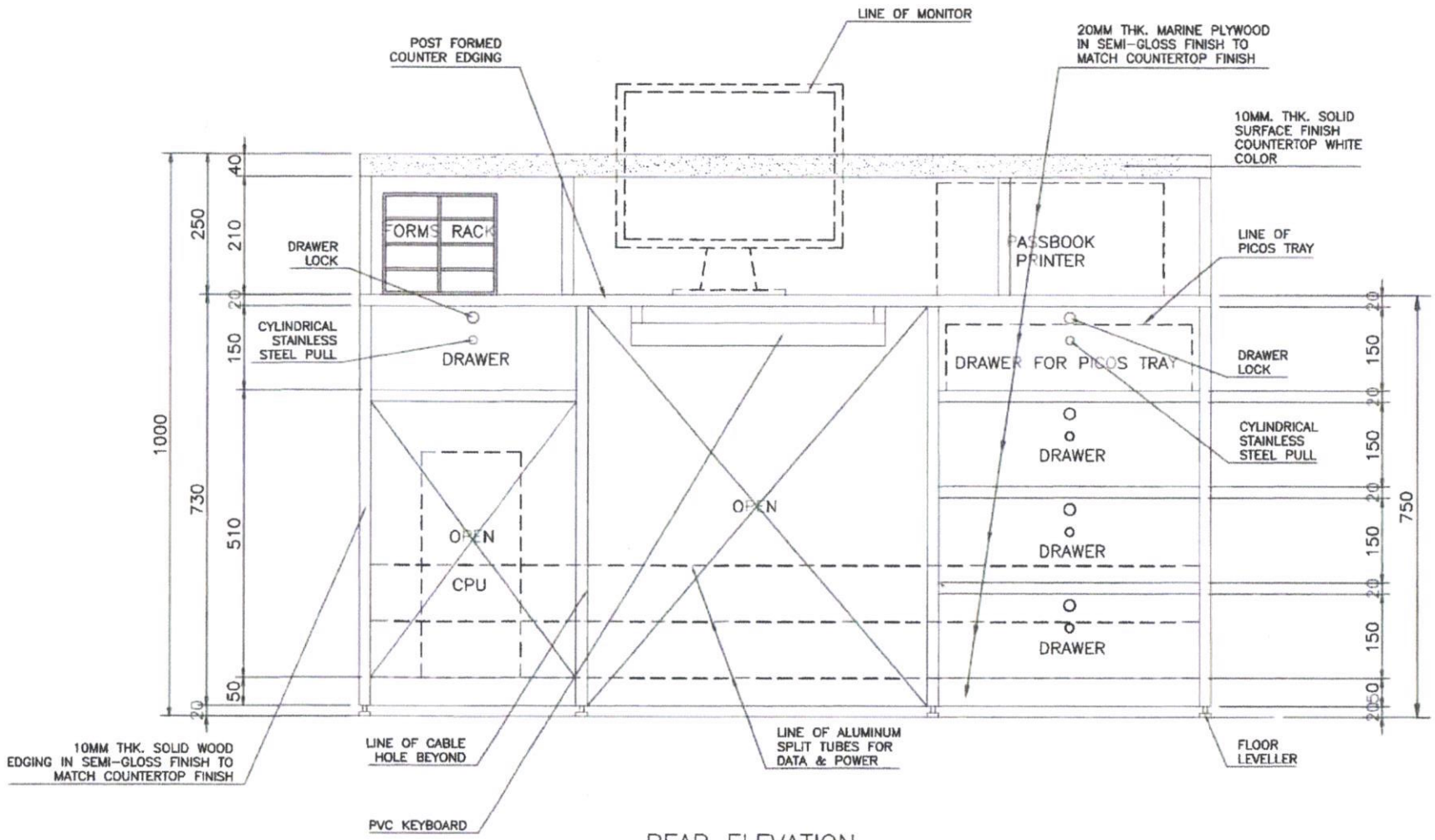

REAR ELEVATION

We Build Possibilities.

DBP NARRA BRANCH

TELLER'S COUNTER (1400mm MODULE) DETAILS

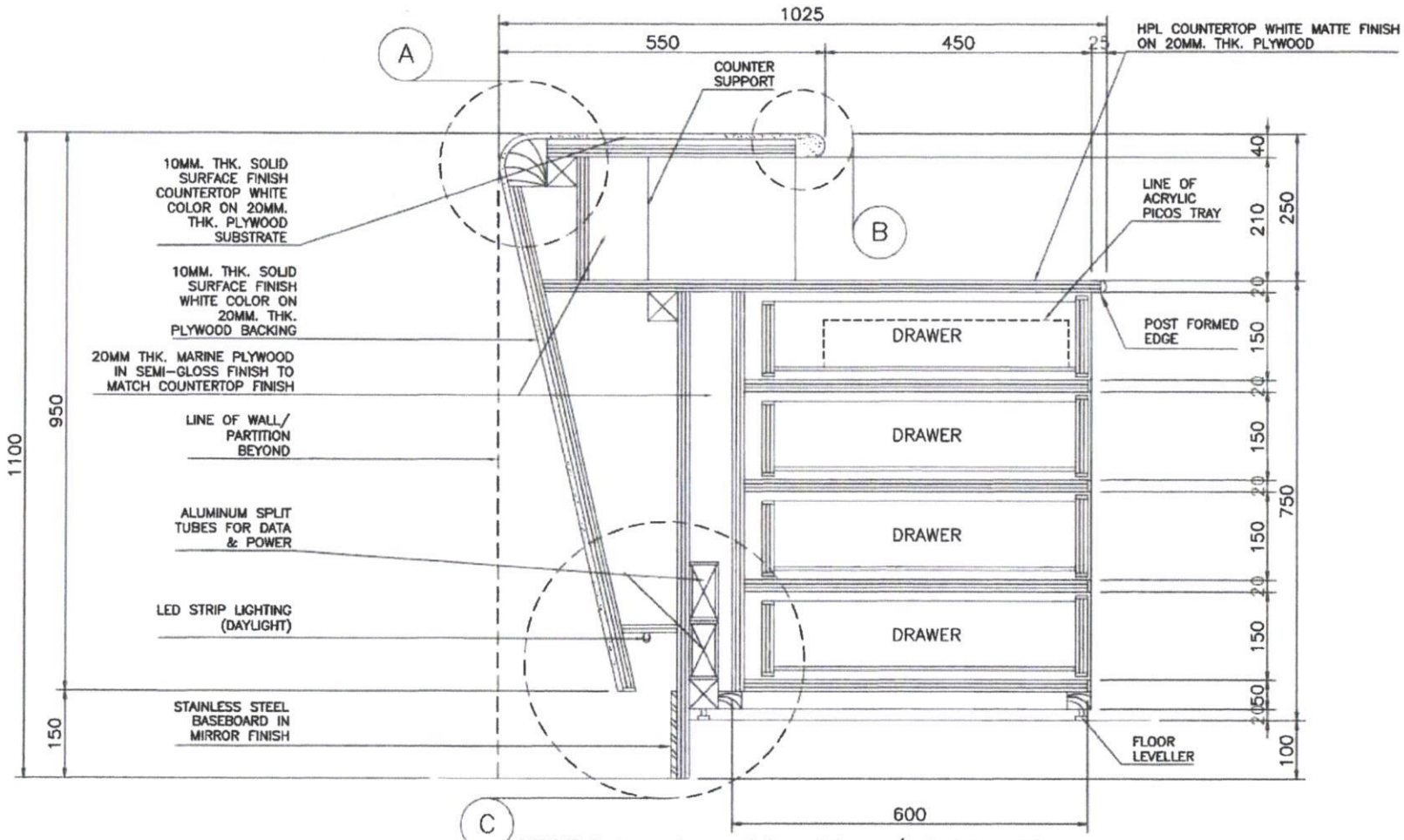

SECTION ALONG DRAWER W/ PICOS TRAY

We Build Possibilities.

DBP NARRA BRANCH

TELLER'S COUNTER (1400mm MODULE) DETAILS

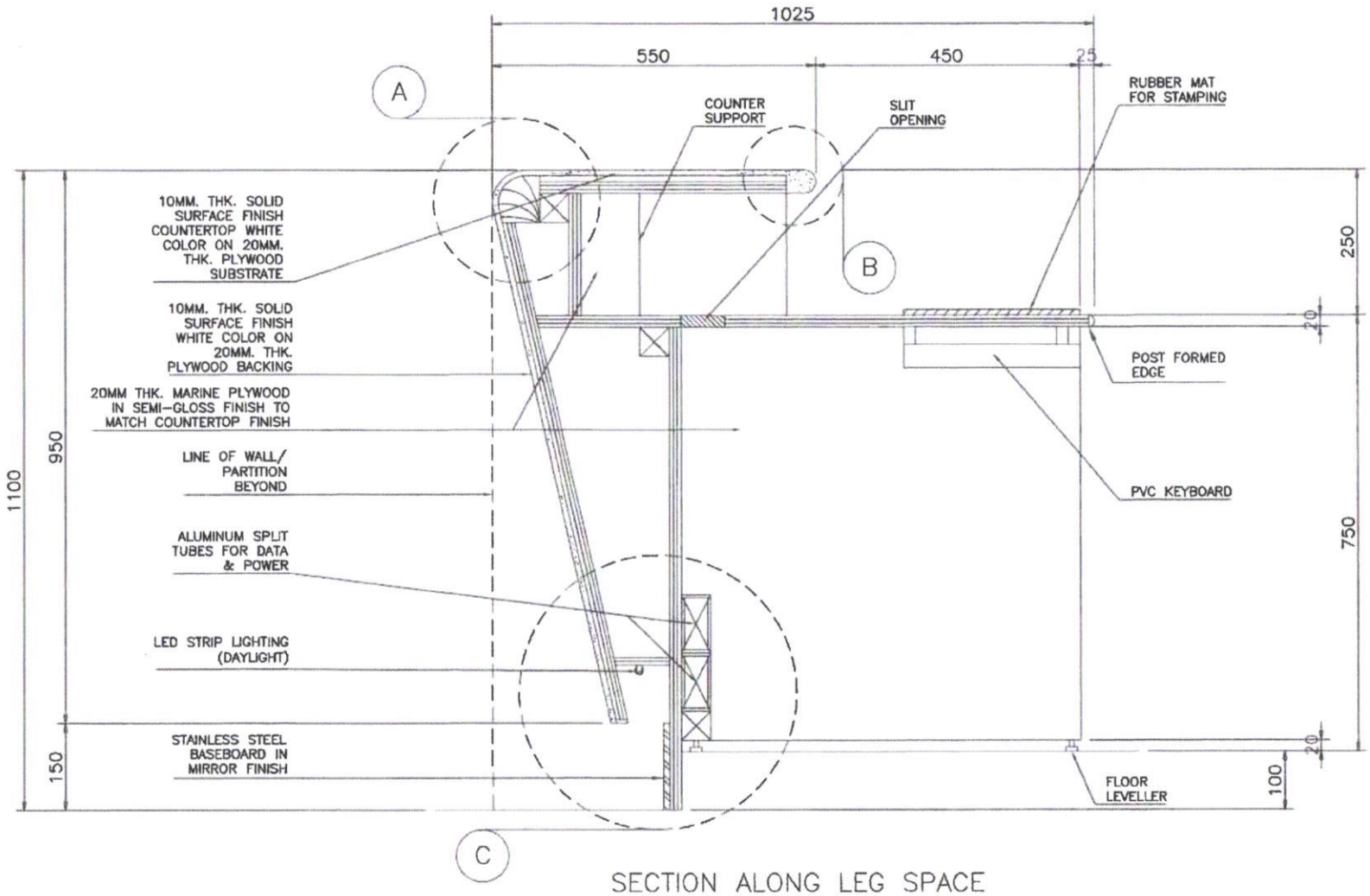

SECTION ALONG LEG SPACE

We Build Possibilities.

DBP NARRA BRANCH

TELLER'S COUNTER (1400mm MODULE) DETAILS

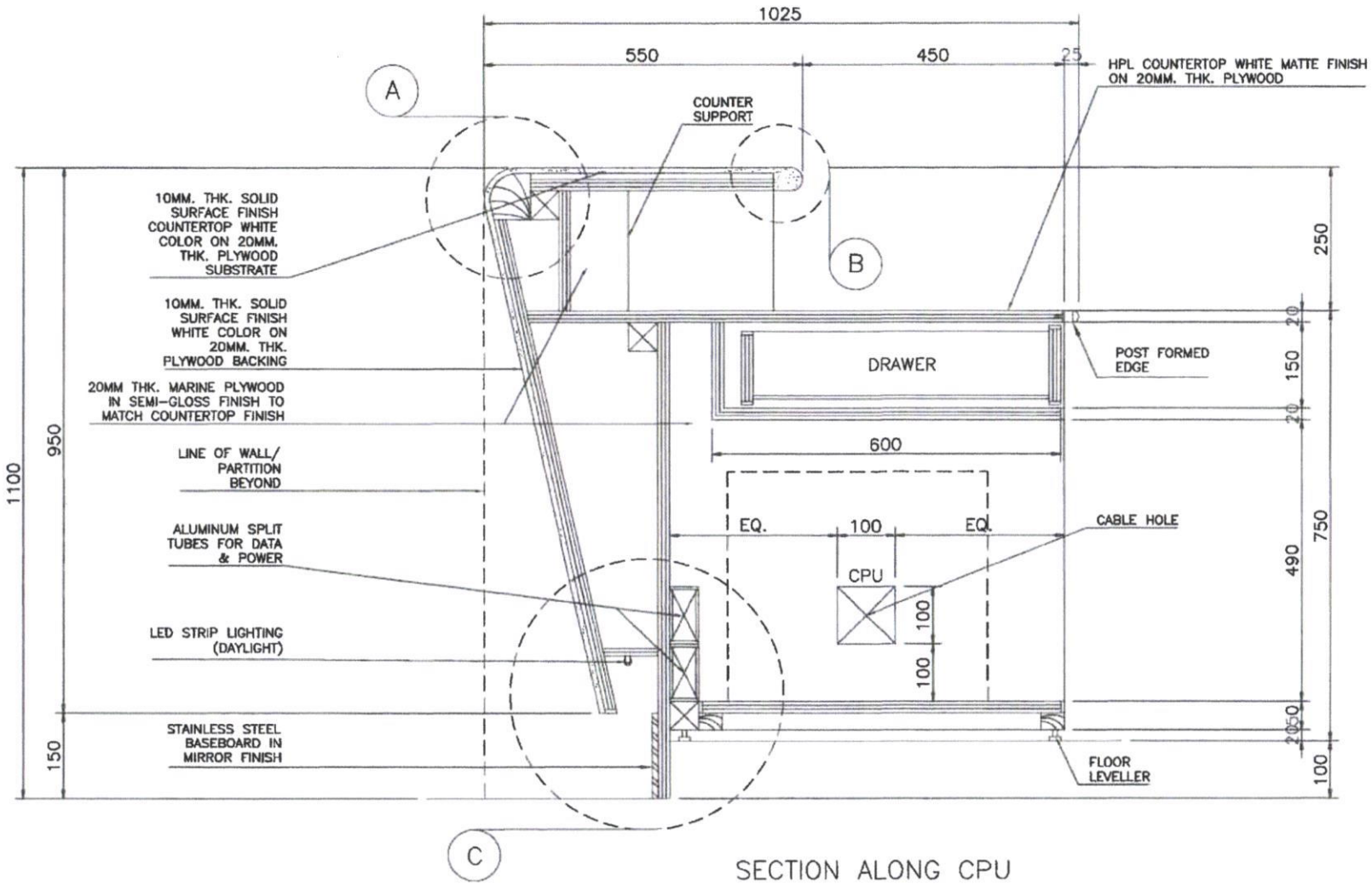

SECTION ALONG CPU

We Build Possibilities.

DBP NARRA BRANCH

TELLER'S COUNTER (1400mm MODULE) DETAILS

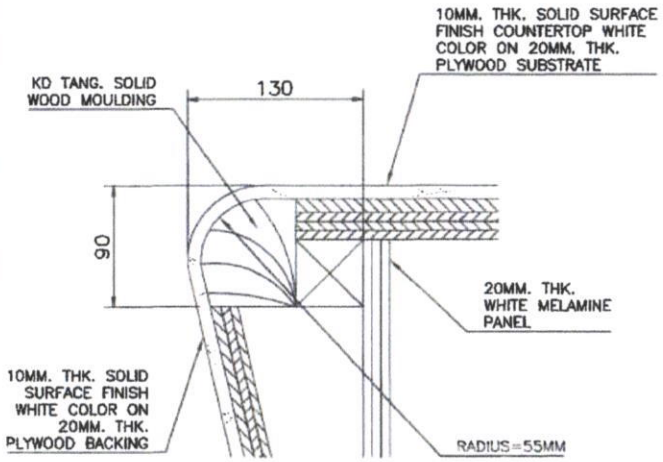

"A" – SPOT DETAIL

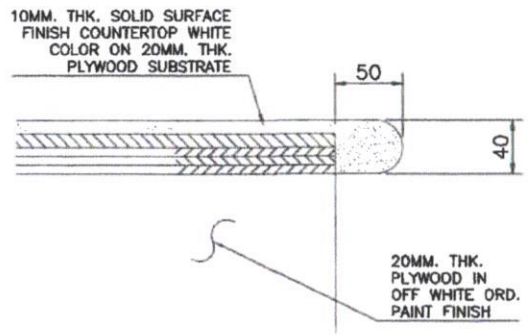

"B" – SPOT DETAIL

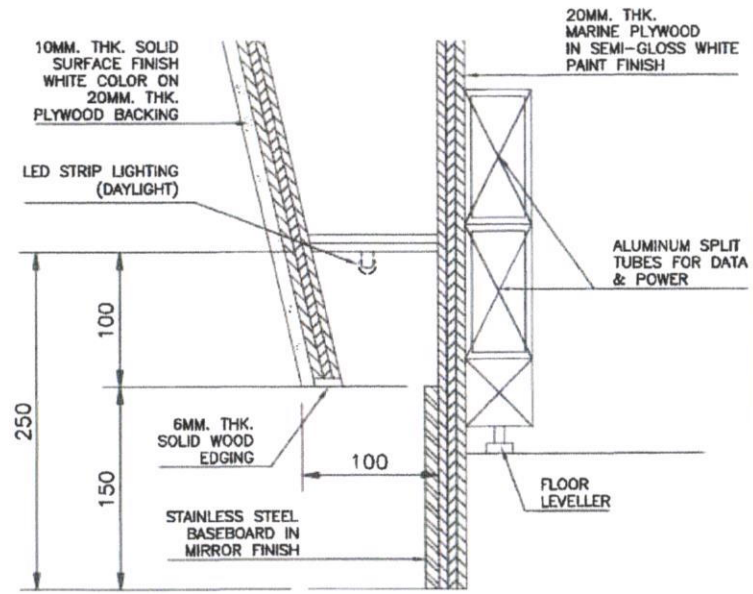

"C" – SPOT DETAIL

DBP We Build Possibilities.	DBP NARRA BRANCH	TELLER'S COUNTER SPOT DETAILS

NOTE :

USE 6MM. THK. CLEAR ACRYLIC FOR ALL COMPONENTS OF PICOS TRAY

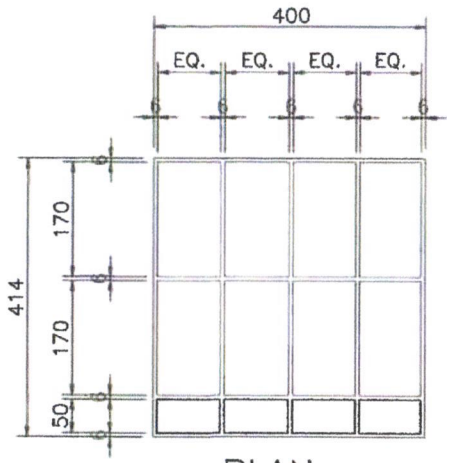

PLAN

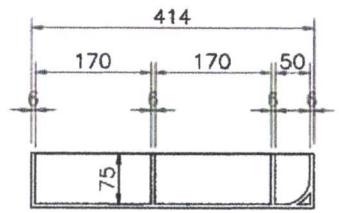

SECTION

PICOS TRAY DETAILS

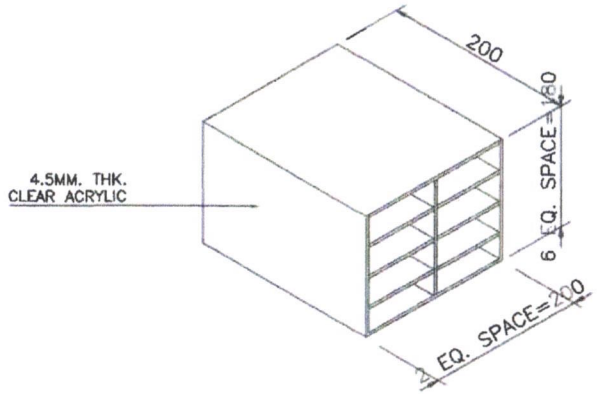

ISOMETRIC–FORMS RACK

DBP We Build Possibilities.	DBP NARRA BRANCH	TELLER'S COUNTER ACCESSORIES DETAILS

ANNEX B

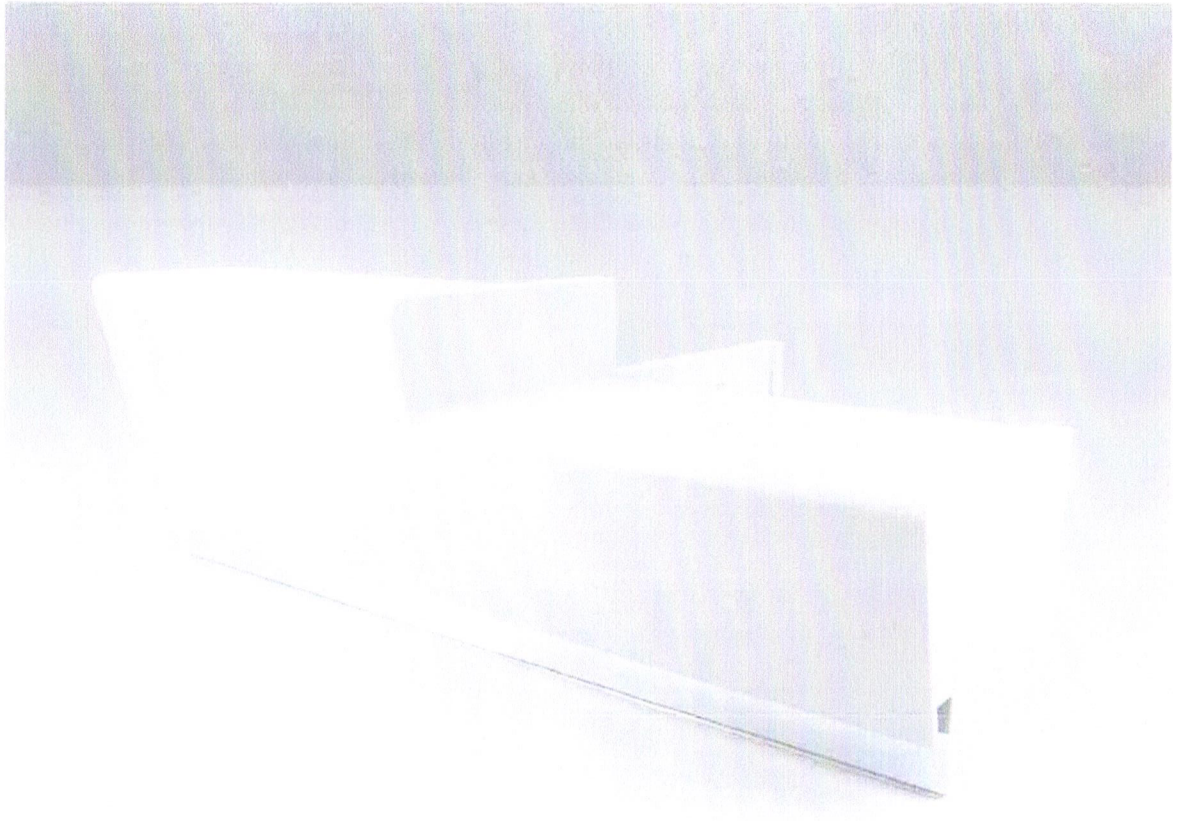

PERSPECTIVE

DBP We Build Possibilities.	DBP NARRA BRANCH	NAC / LOW COUNTER (1400mm MODULE) DETAILS

LEGEND:

Ⓐ MOBILE PEDESTAL

Ⓑ CPU HOLDER

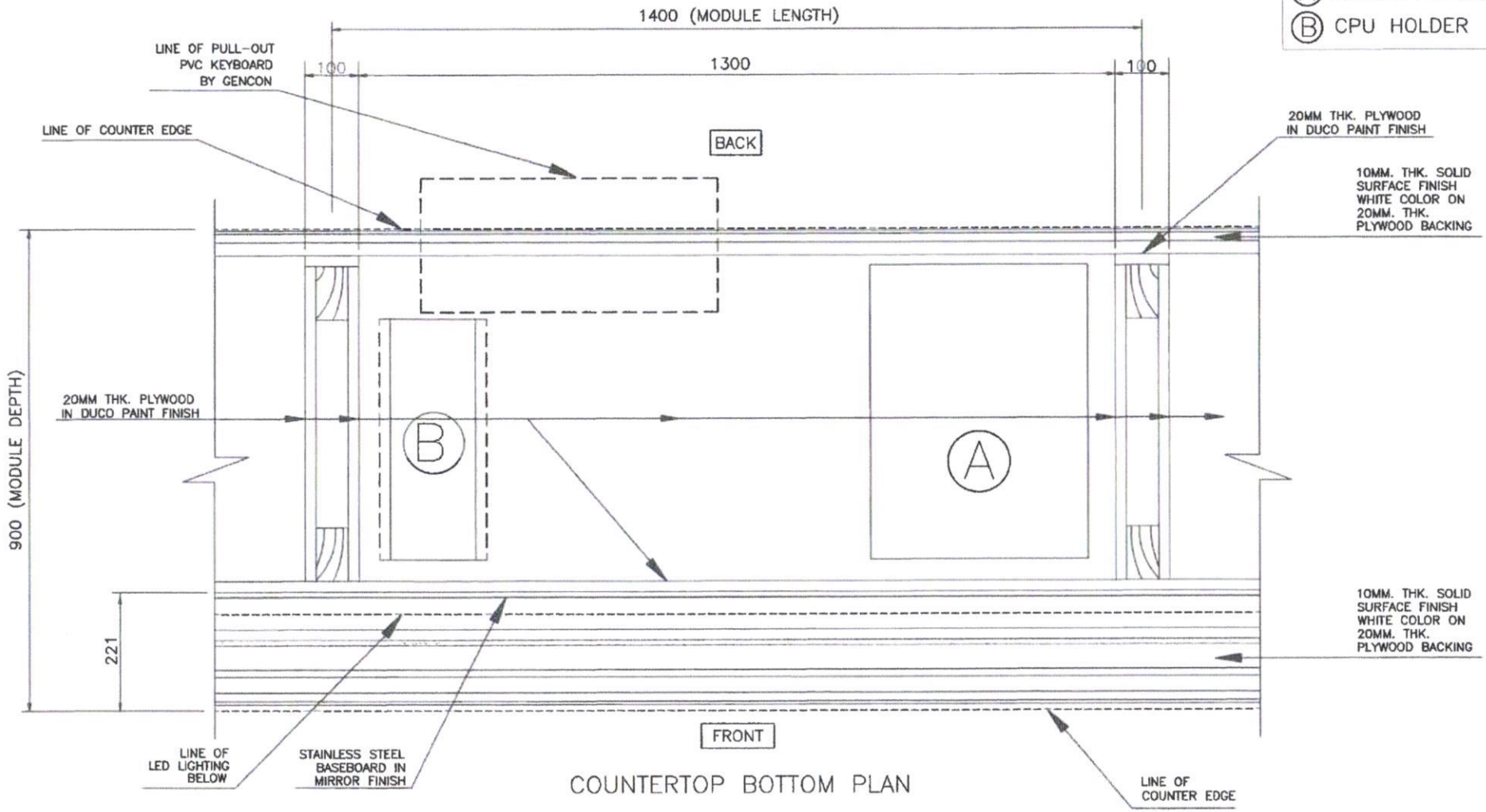

COUNTERTOP BOTTOM PLAN

We Build Possibilities.

DBP NARRA BRANCH

NAC / LOW COUNTER (1400mm MODULE) DETAILS

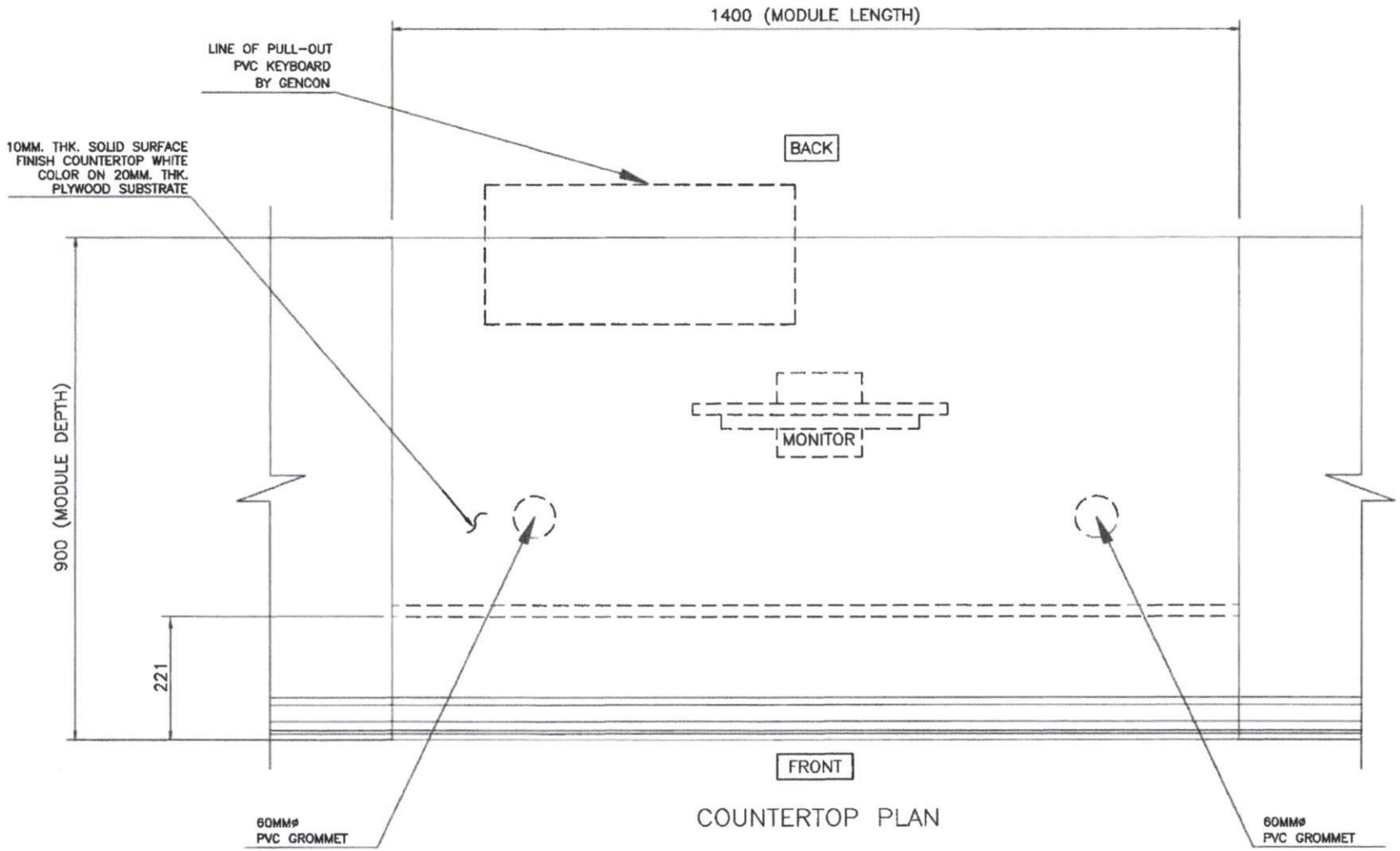

COUNTERTOP PLAN

We Build Possibilities.

DBP NARRA BRANCH

NAC / LOW COUNTER (1400mm MODULE) DETAILS

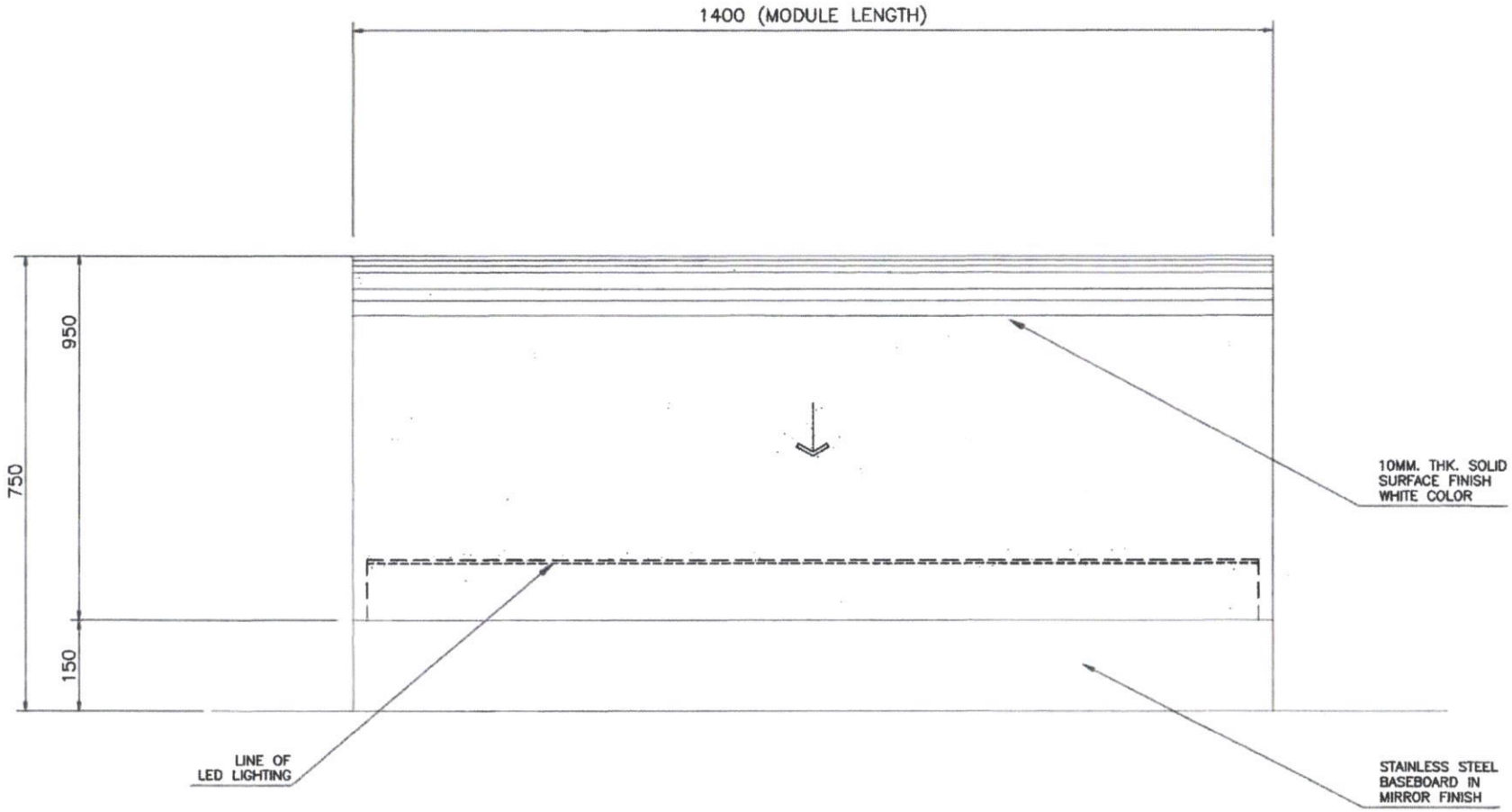

FRONT ELEVATION

LEGEND :

↓ SLOPE DIRECTION

DBP We Build Possibilities.	DBP NARRA BRANCH	NAC / LOW COUNTER (1400mm MODULE) DETAILS

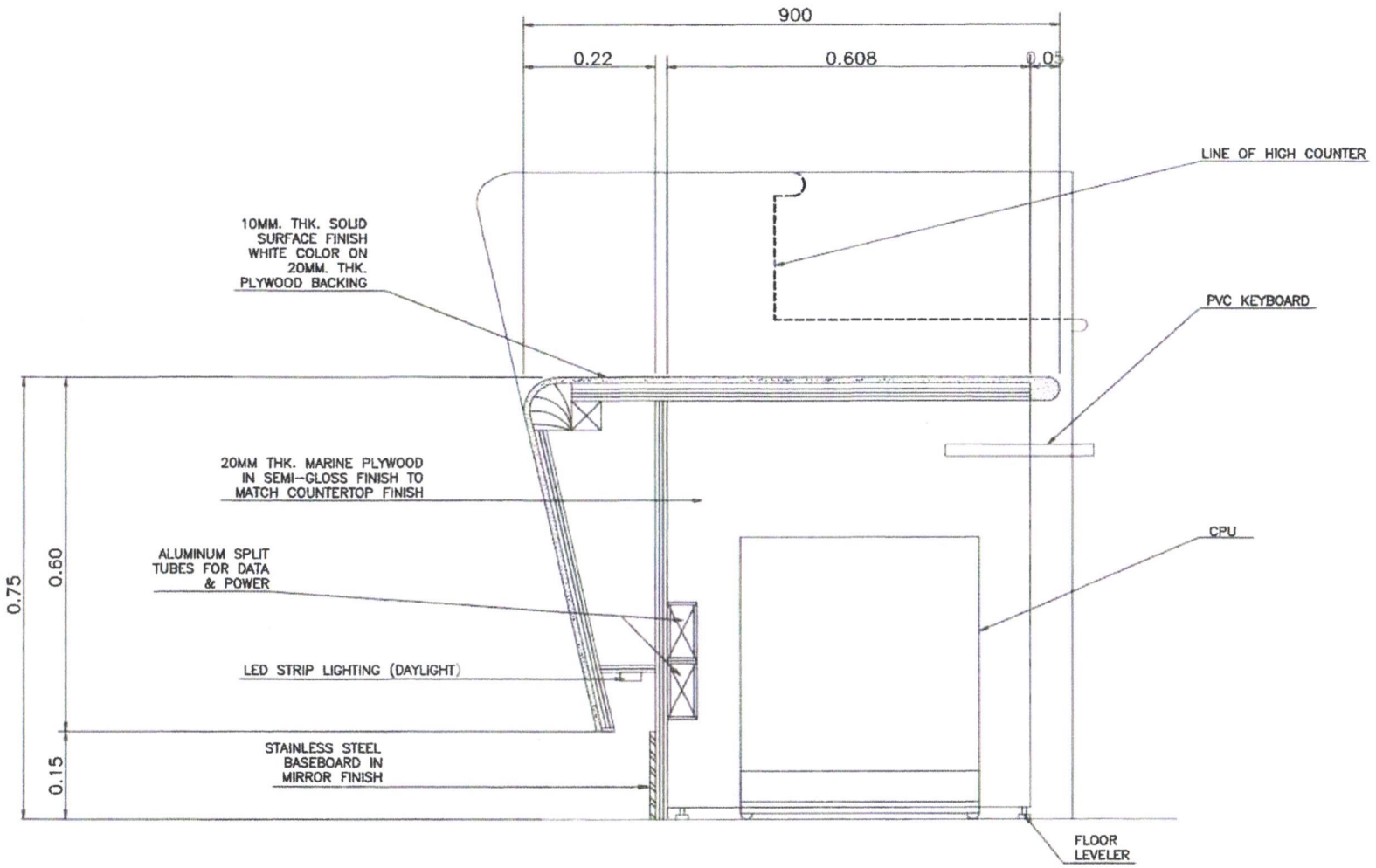

SECTION ALONG CPU

We Build Possibilities.

DBP NARRA BRANCH

NAC / LOW COUNTER (1400mm MODULE) DETAILS

ANNEX C

PERSPECTIVE

DBP We Build Possibilities.	DBP NARRA BRANCH	GUARD'S PODIUM

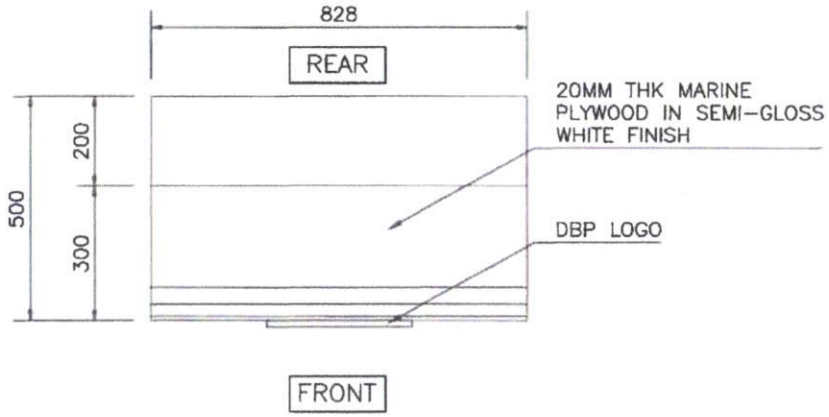

PLAN

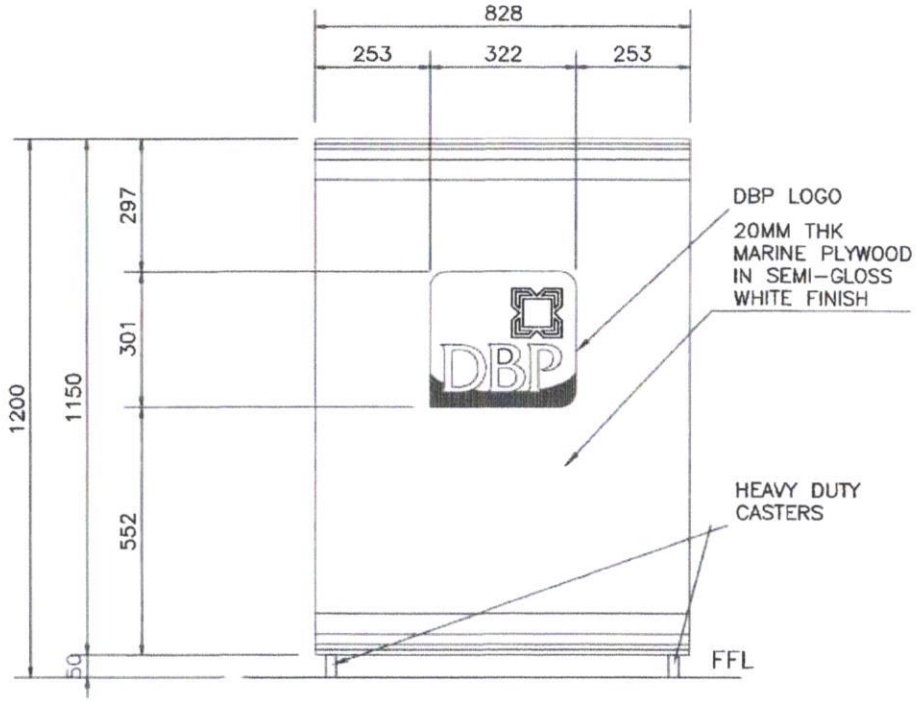

FRONT ELEVATION

We Build Possibilities.

DBP NARRA BRANCH

GUARD'S PODIUM

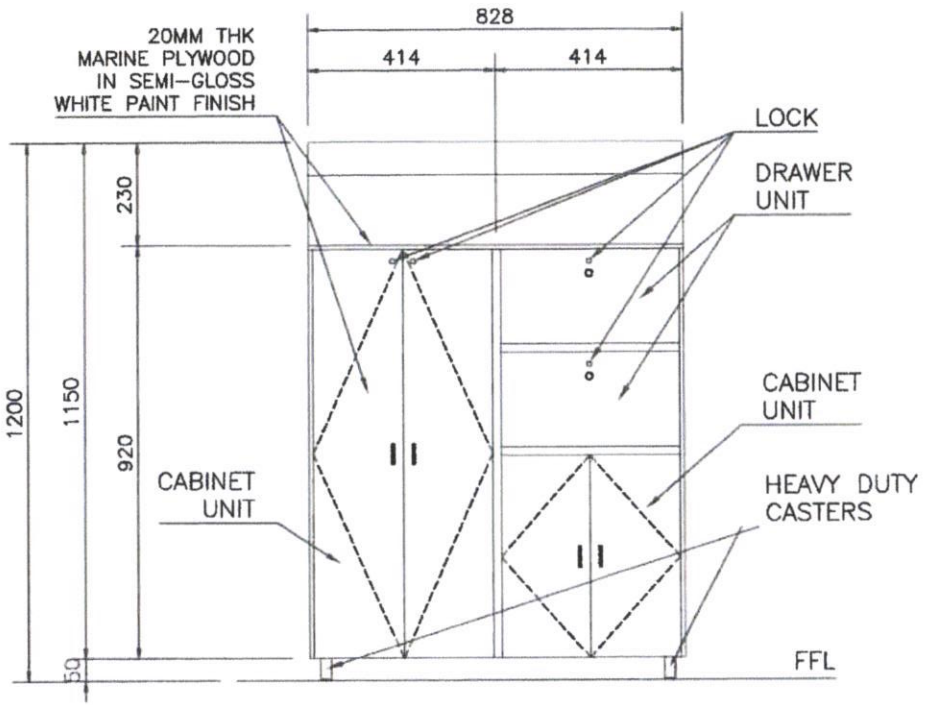

TYPICAL SIDE ELEVATION

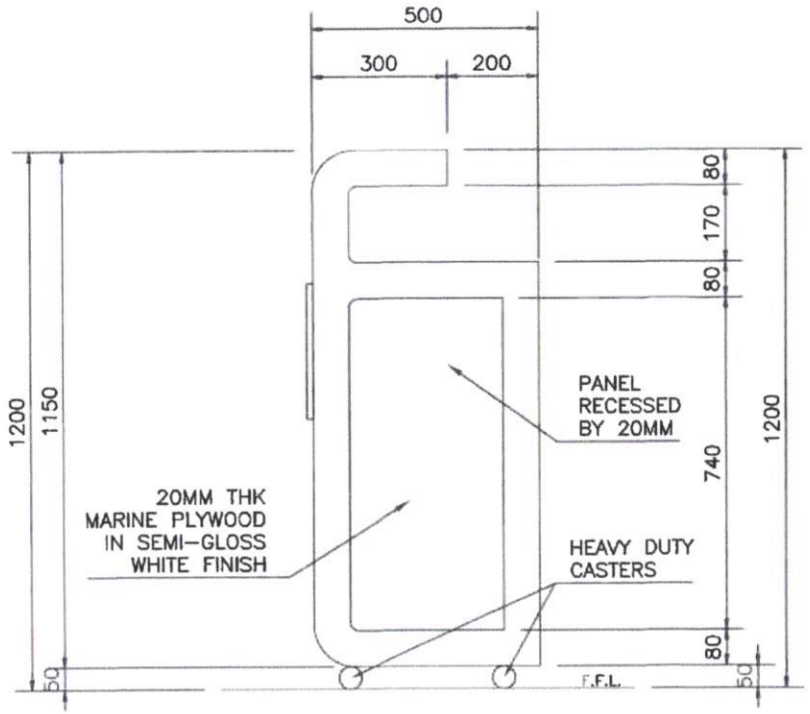

TYPICAL SIDE ELEVATION

We Build Possibilities.

DBP NARRA BRANCH

GUARD'S PODIUM

ANNEX D

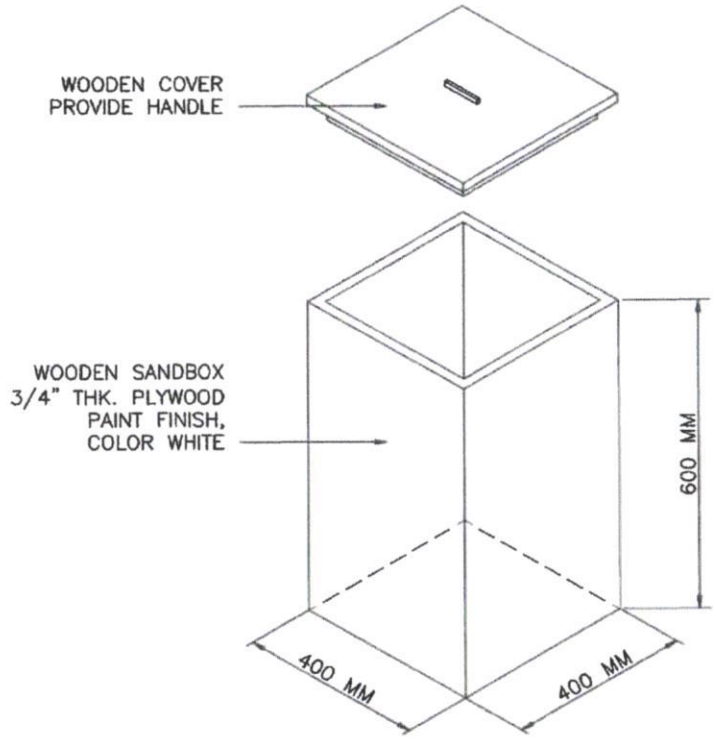

ISOMETRIC

DBP We Build Possibilities.	DBP NARRA BRANCH	SANDBOX

ANNEX E

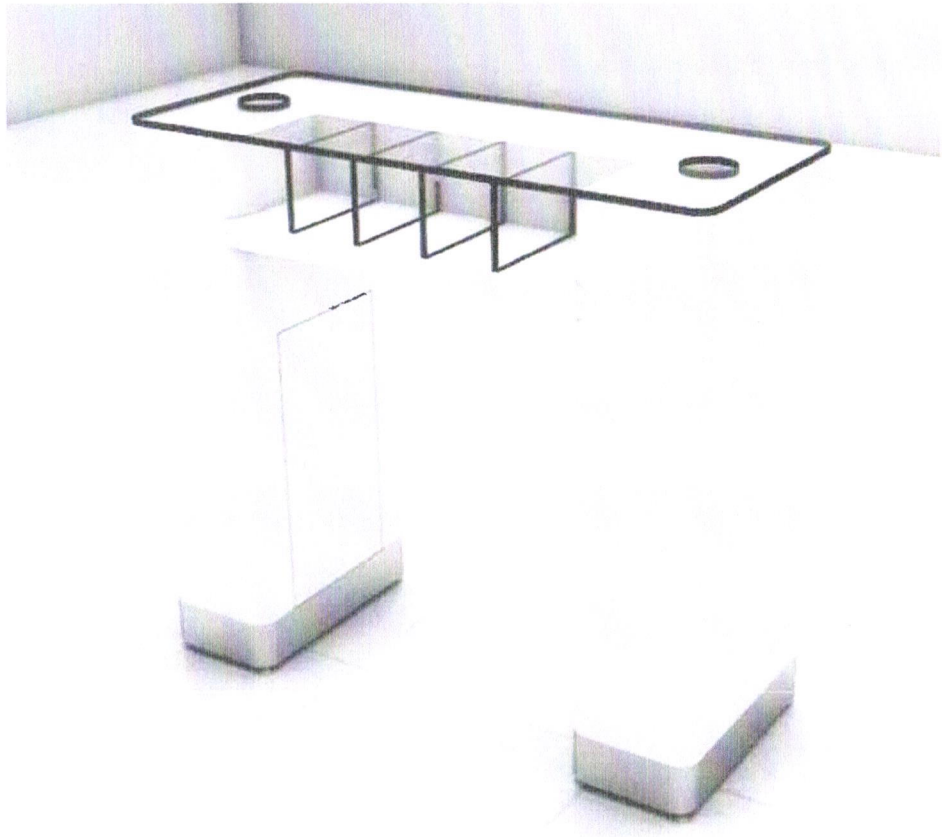

PERSPECTIVE

DBP We Build Possibilities.	DBP NARRA BRANCH	FORMS RACK / FORMS COUNTER

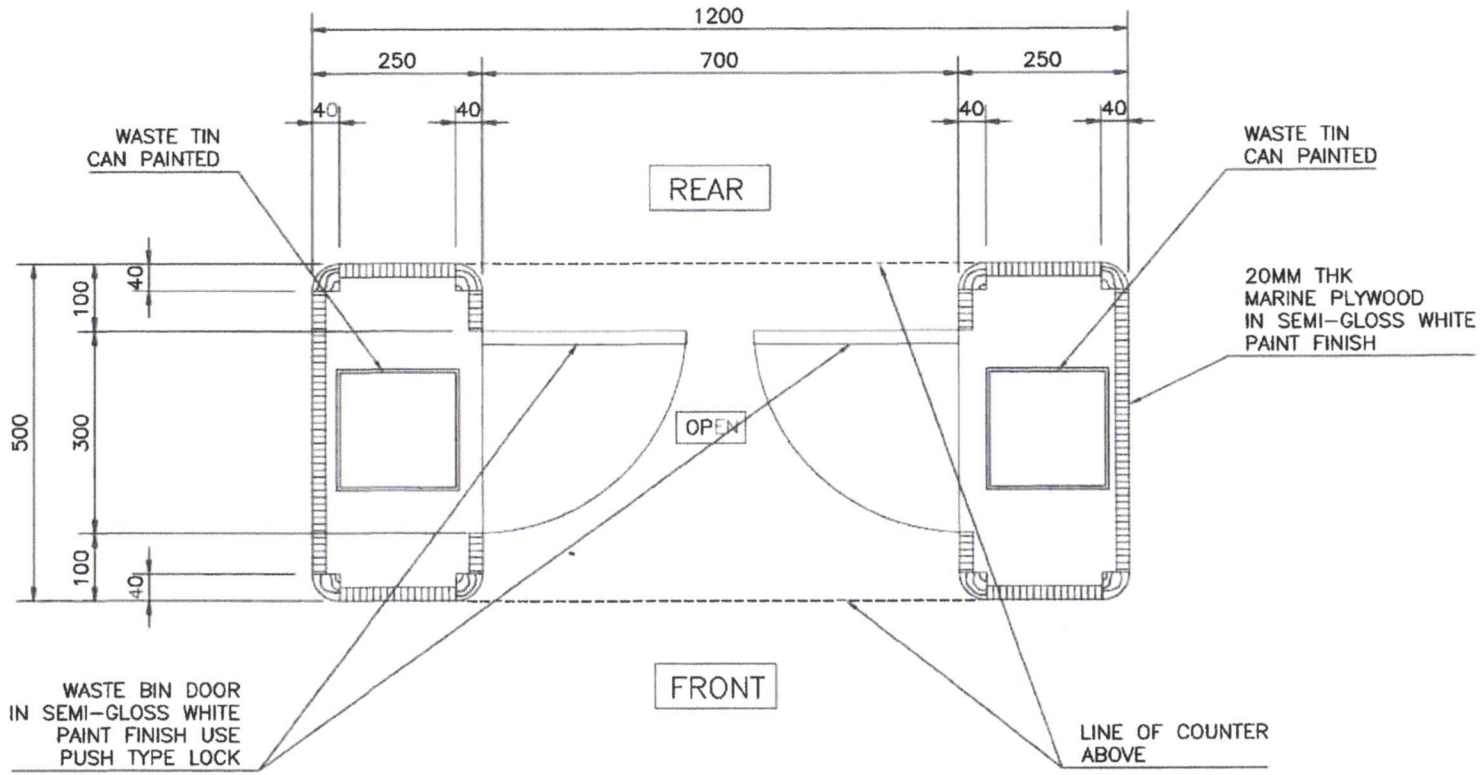

BOTTOM PLAN

We Build Possibilities.

DBP NARRA BRANCH

FORMS RACK / FORMS COUNTER

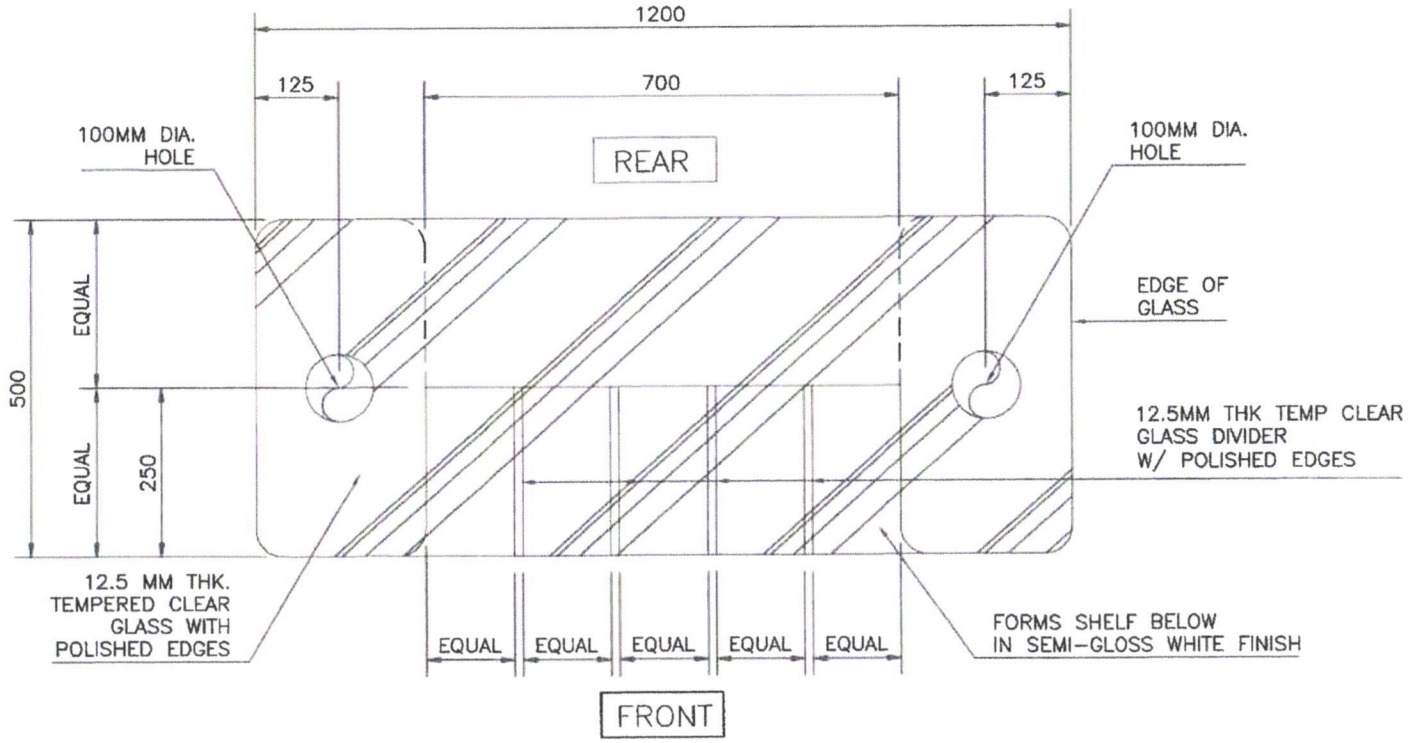

COUNTER TOP PLAN

DBP We Build Possibilities.	DBP NARRA BRANCH	FORMS RACK / FORMS COUNTER

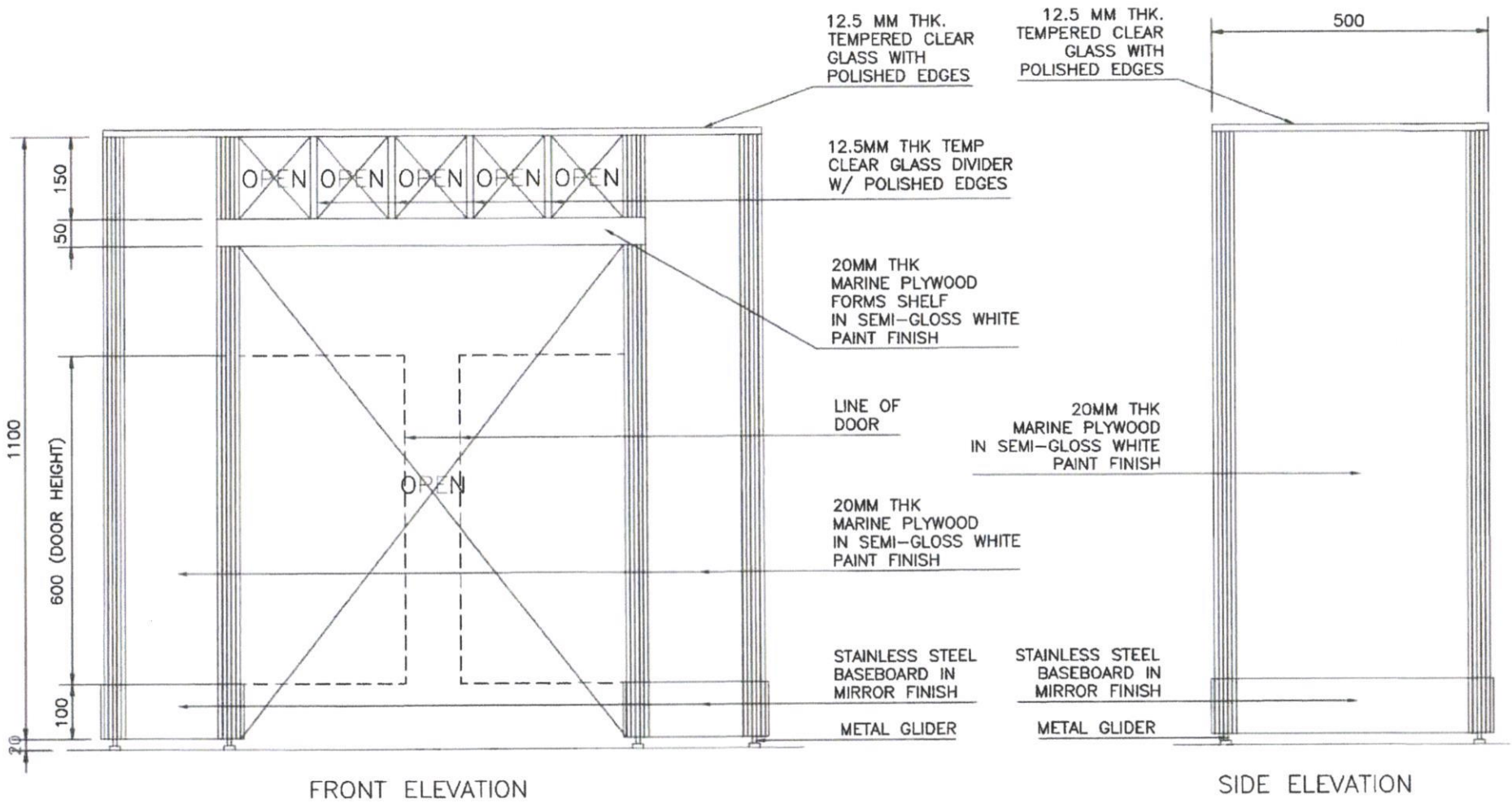

We Build Possibilities.

DBP NARRA BRANCH

FORMS RACK / FORMS COUNTER

ANNEX F

LEGEND:			
Ⓐ	SERVER CPU	Ⓔ	UPS
Ⓑ	SERVER LCD MONITOR	Ⓕ	DATA CABINET
Ⓒ	PVC PULL–OUT KEYBOARD TRAY		
Ⓓ	FAX/PRINTER/SCANNER		

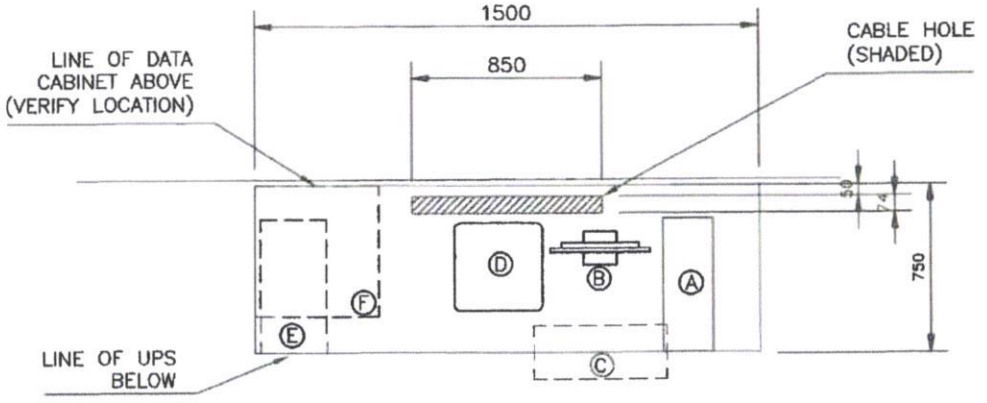

PLAN

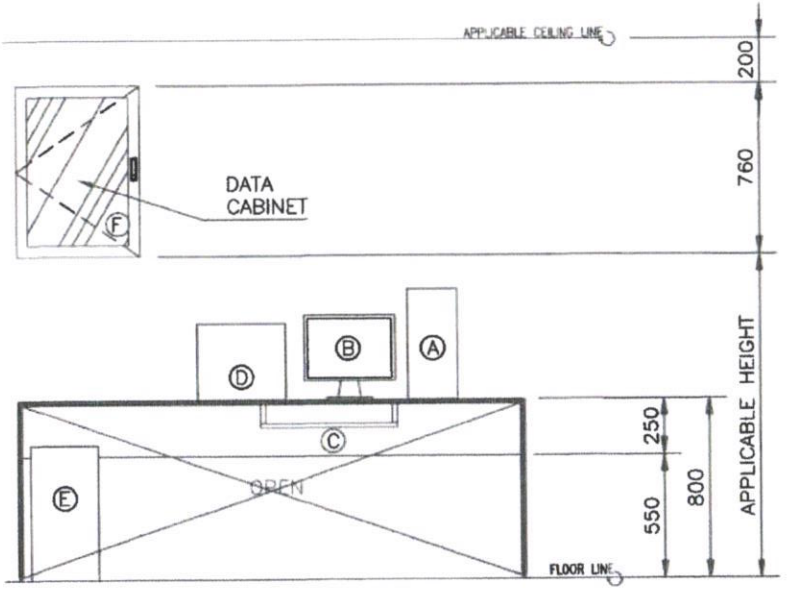

ELEVATION

We Build Possibilities.

DBP NARRA BRANCH

SERVER/ DATA CABINET/ FAX SET UP

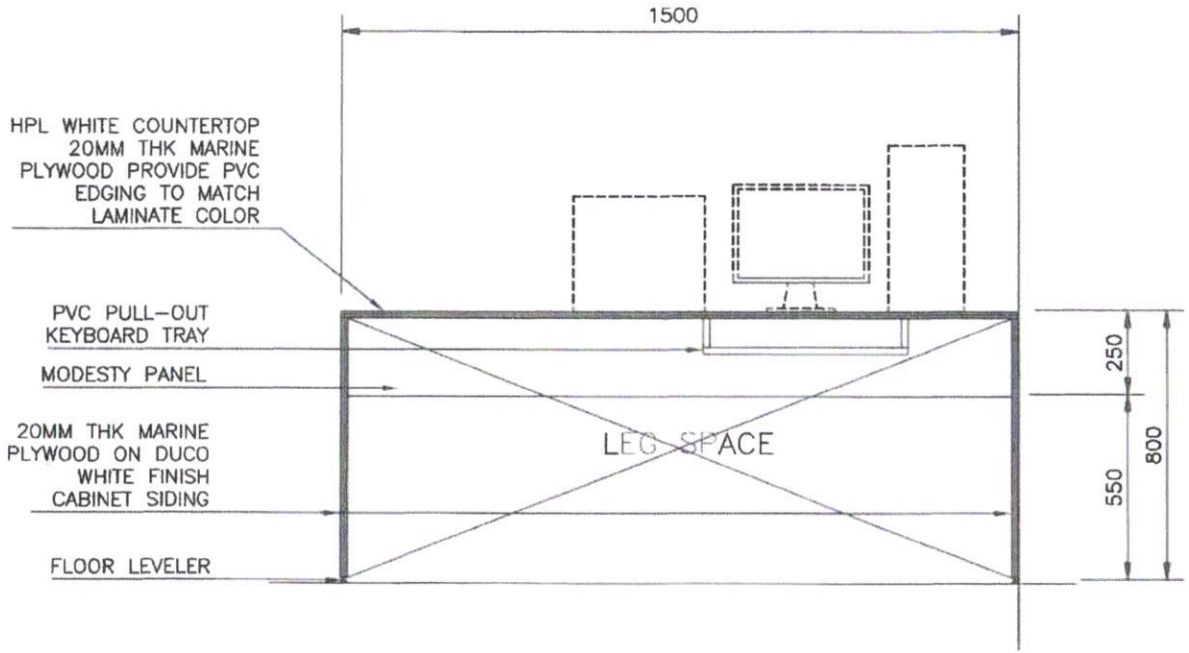

ELEVATION

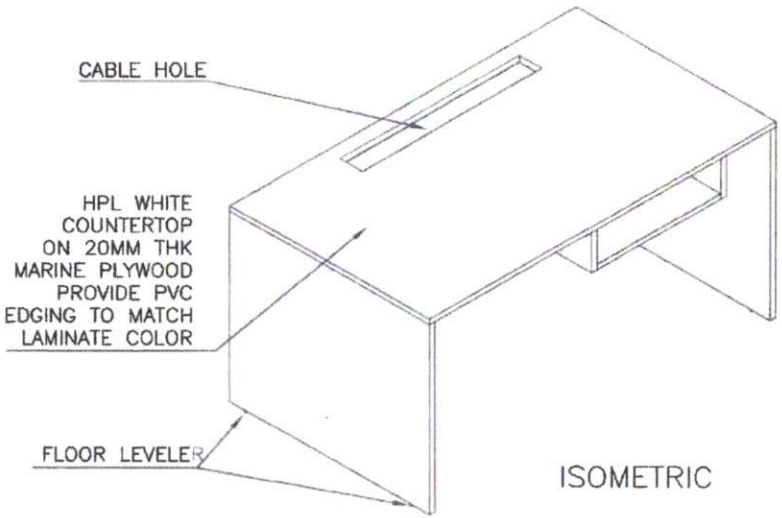

ISOMETRIC

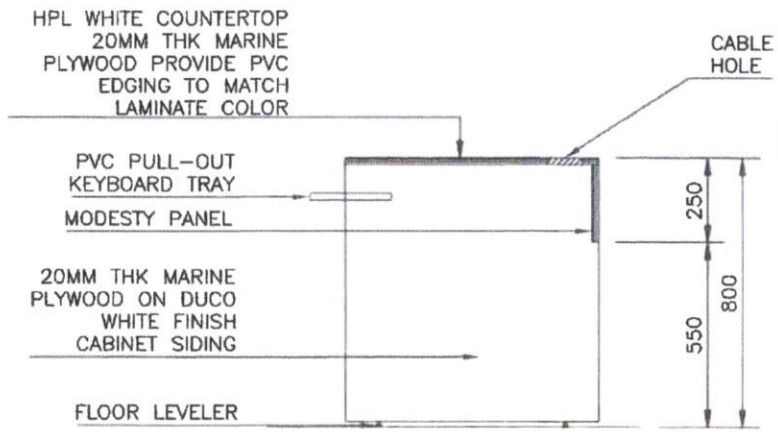

SECTION

We Build Possibilities.

DBP NARRA BRANCH

SERVER TABLE DETAILS

ANNEX G

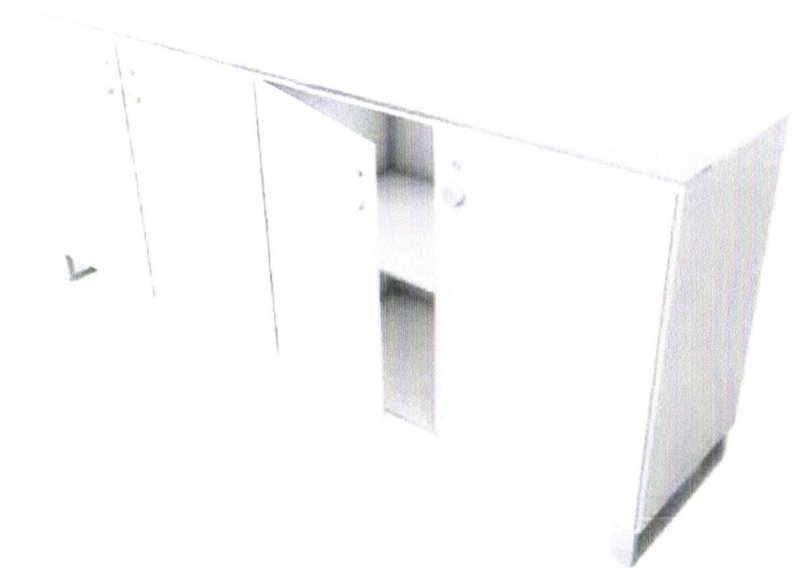

PERSPECTIVE

DBP We Build Possibilities.	DBP NARRA BRANCH	BRANCH HEAD'S BACK TABLE DETAILS (WITHOUT SIDE RETURN)

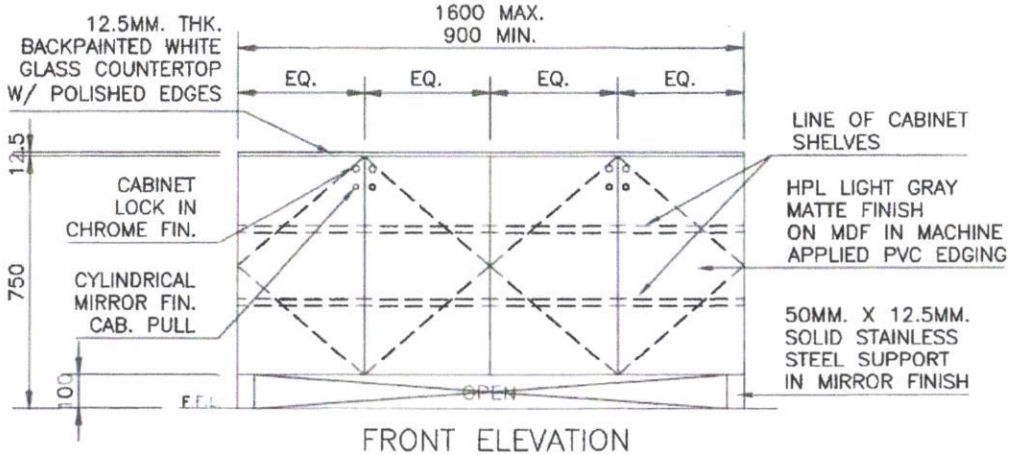

FRONT ELEVATION

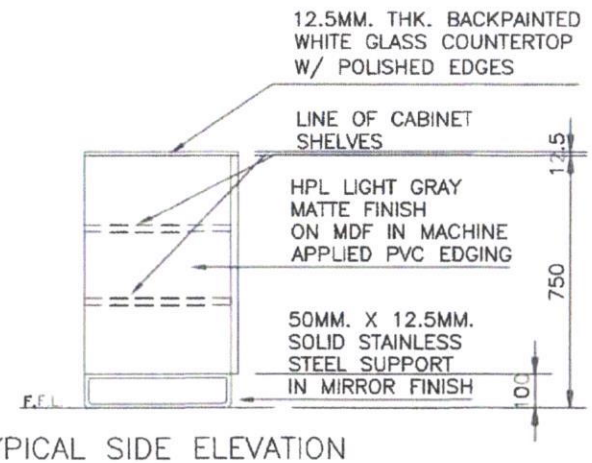

TYPICAL SIDE ELEVATION

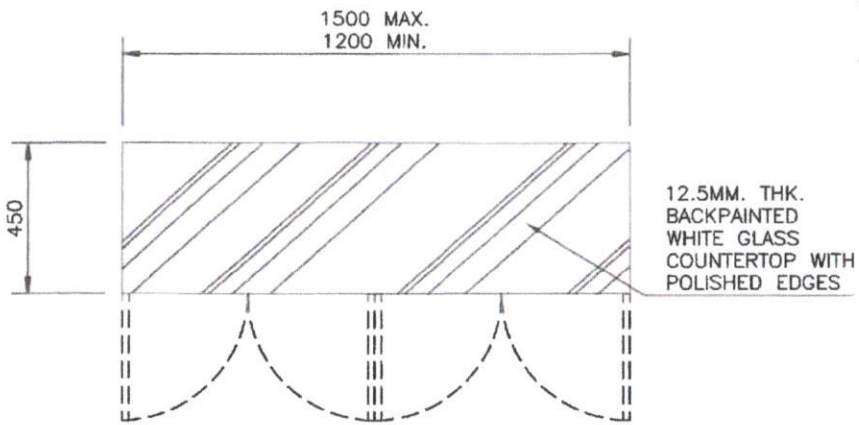

COUNTERTOP PLAN

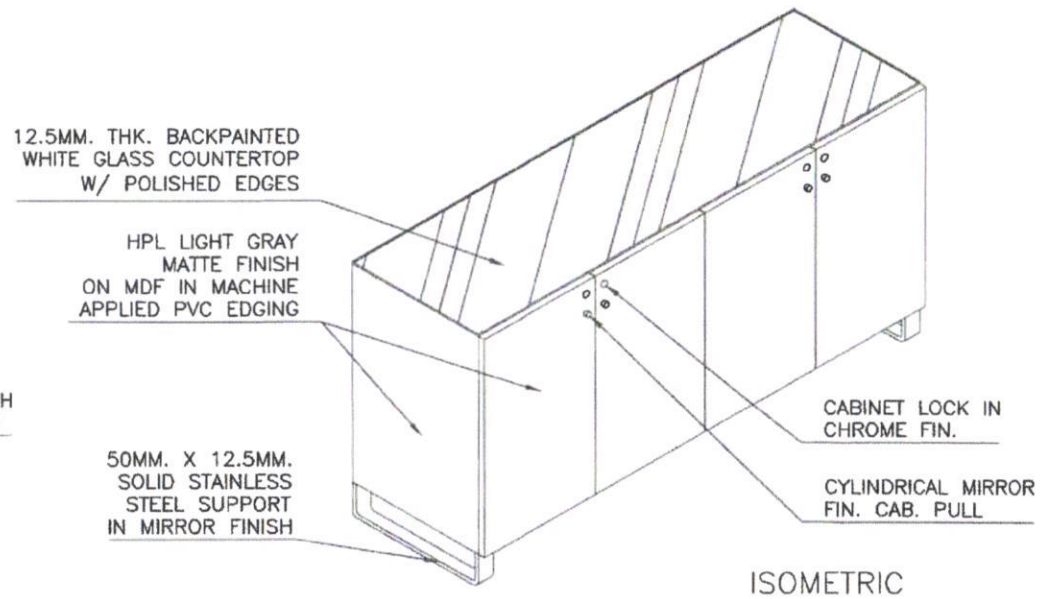

ISOMETRIC

We Build Possibilities.

DBP NARRA BRANCH

BRANCH HEAD'S BACK TABLE DETAILS (WITHOUT SIDE RETURN)

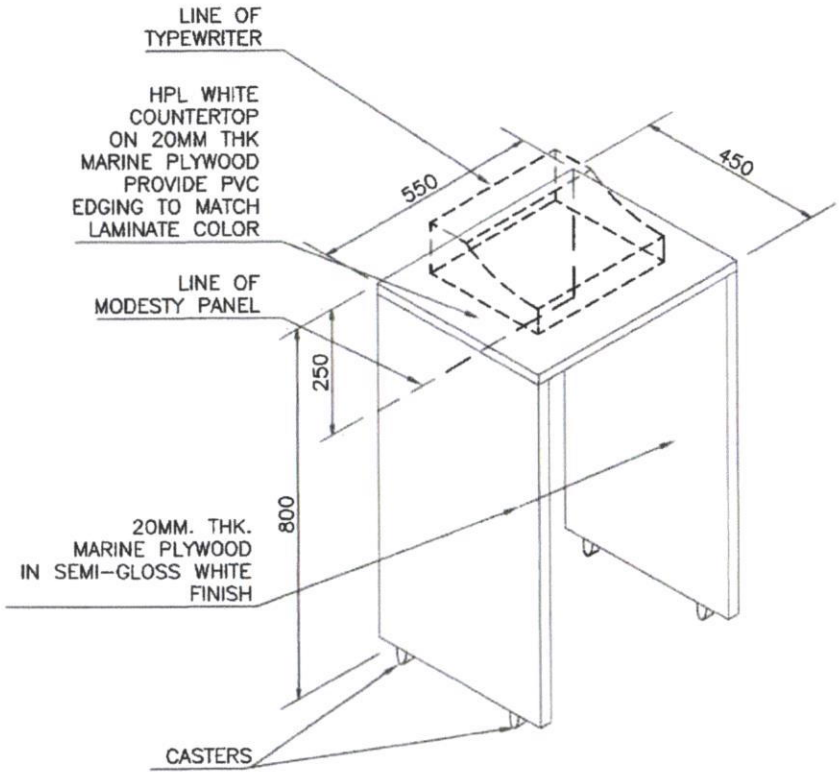

TYPING TABLE ISOMETRIC

DBP We Build Possibilities.	DBP NARRA BRANCH	TYPING TABLE DETAILS

ANNEX I

NOTE :

USE 6MM. THK. CLEAR ACRYLIC FOR ALL COMPONENTS OF PICOS TRAY

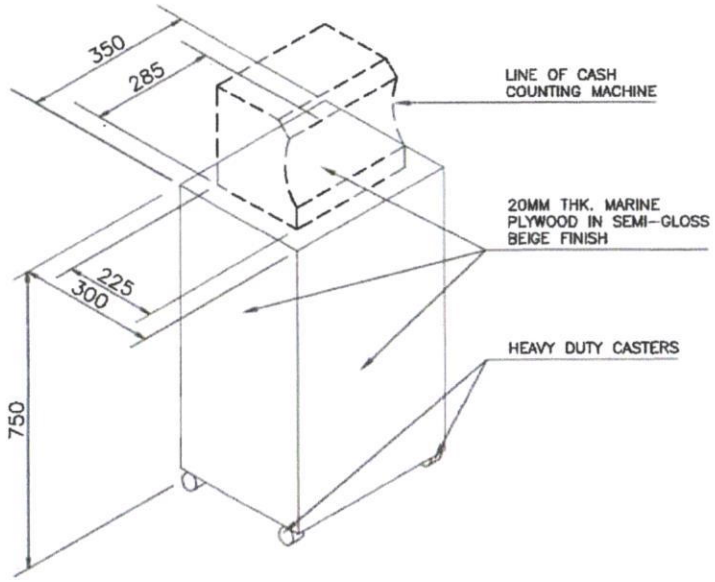

MONEY COUNTER MODULE

DBP We Build Possibilities.	DBP NARRA BRANCH	MONEY COUNTER MODULE

ANNEX J

PERSPECTIVE

NOTES:

1. VERIFY SIZE OF BROCHURE BEFORE FABRICATION OF ACRYLIC INSERTS.

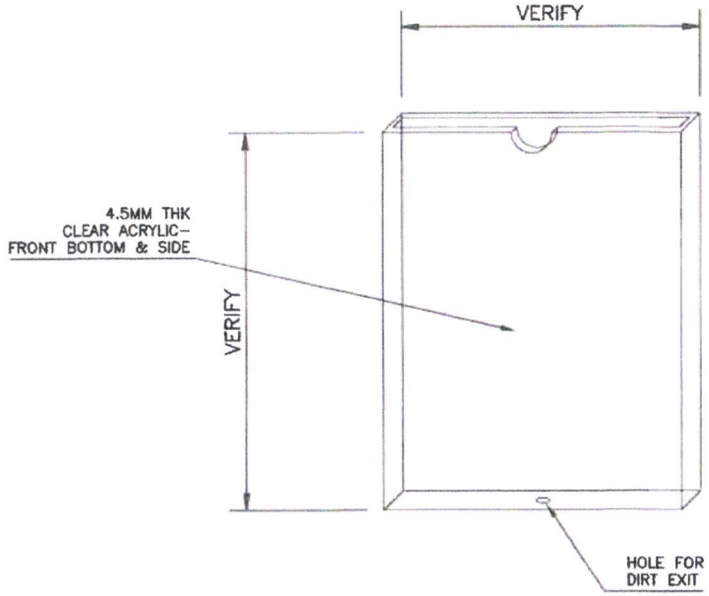

ISOMETRIC OF
ACRYLIC INSERTS

DBP We Build Possibilities.	DBP NARRA BRANCH	POSTER STAND

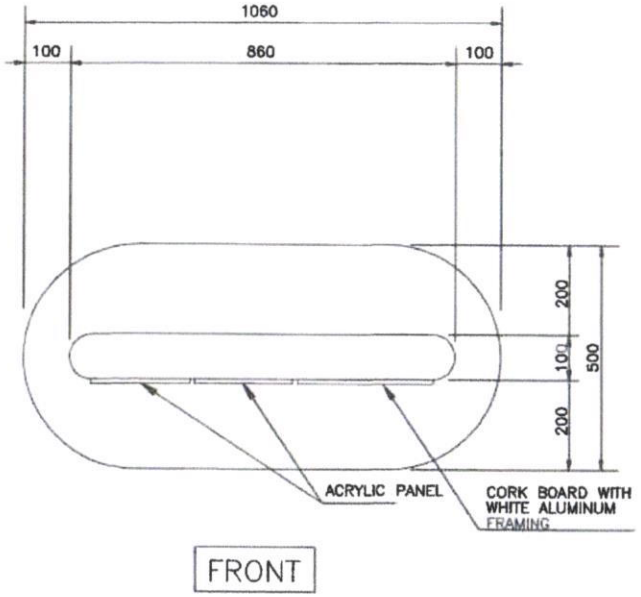

PLAN

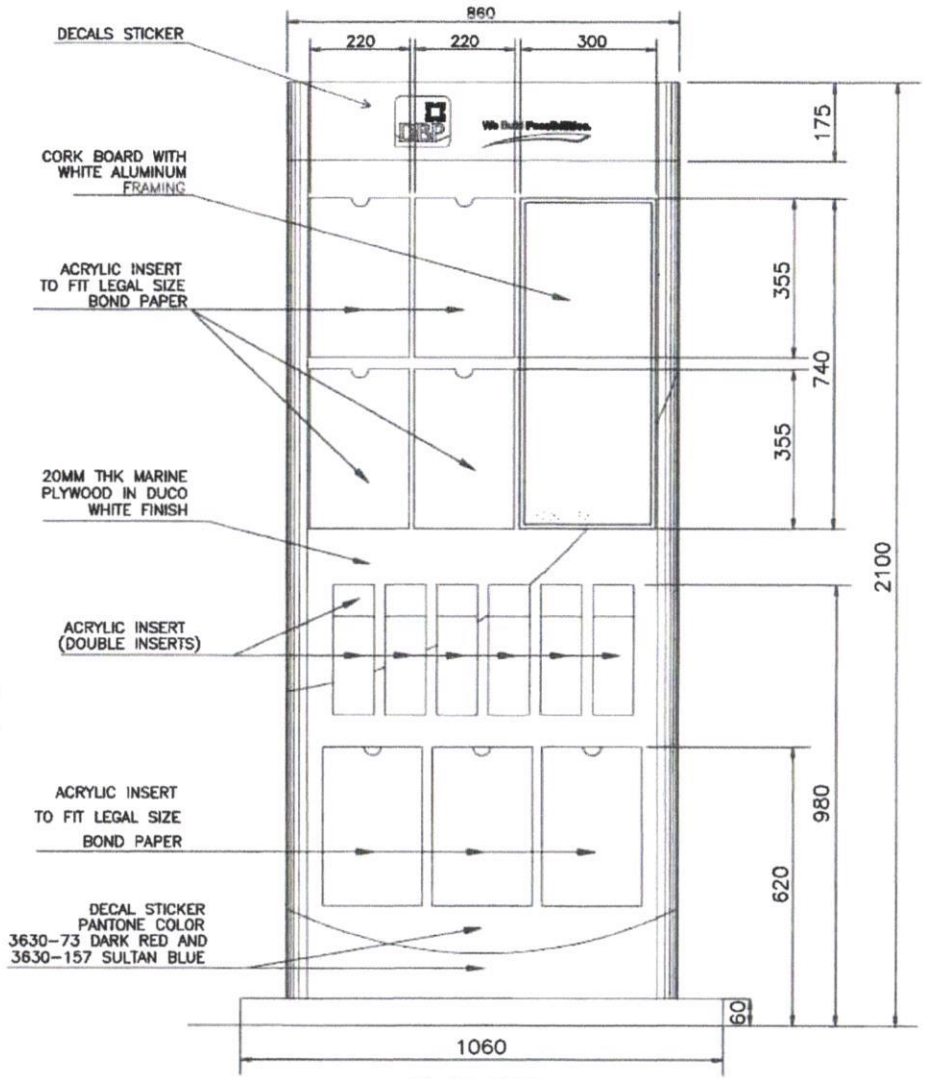

ELEVATION

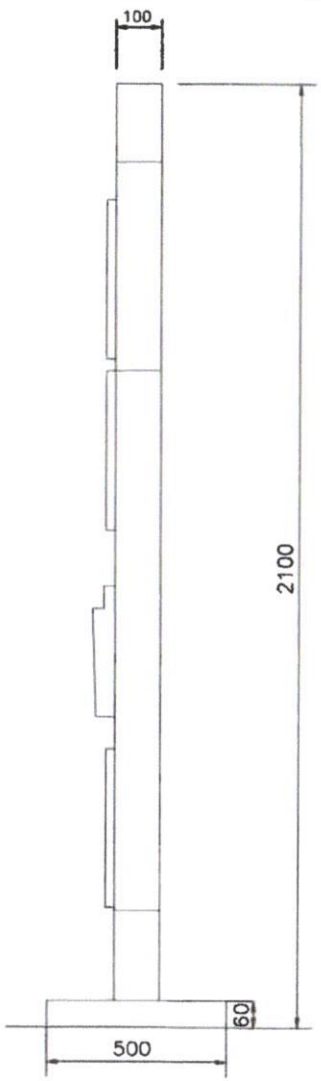

SIDE ELEVATION

We Build Possibilities.

DBP NARRA BRANCH

POSTER STAND

ANNEX K

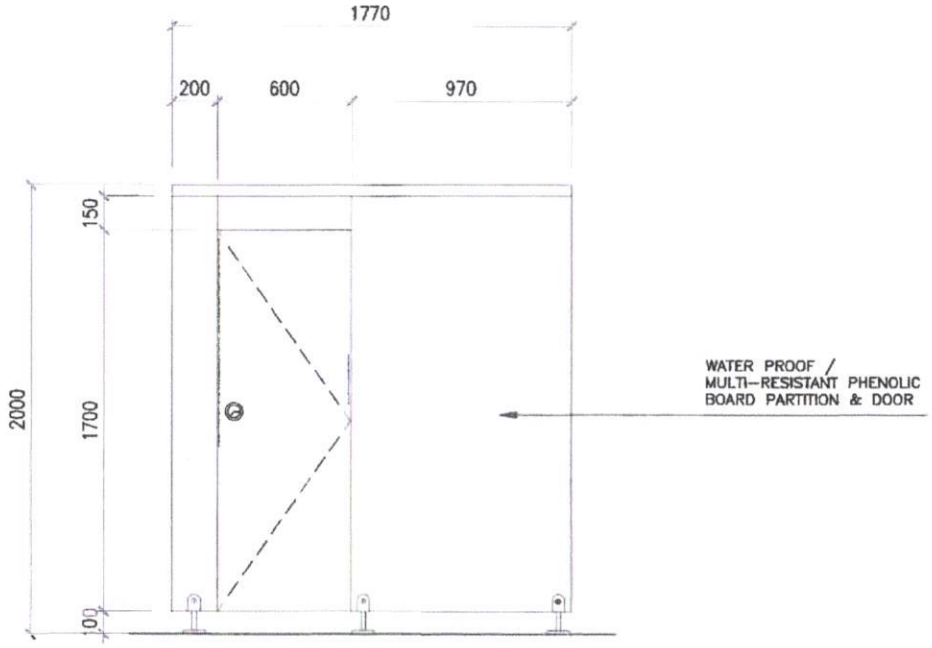

PD
1

TYPE	PHENOLIC BOARDS. SELF-SUPPORTING COMPACT DECORATIVE LAMINATES COMPLETE WITH NYLON ACCESSORIES AND LOCK INDICATOR
HARDWARES	AS PER MANUFACTURER STANDARD
NO. OF SETS	1 SET
LOCATION	ALL GENDER C.R.

DBP We Build Possibilities.	DBP NARRA BRANCH	PHENOLIC DOOR

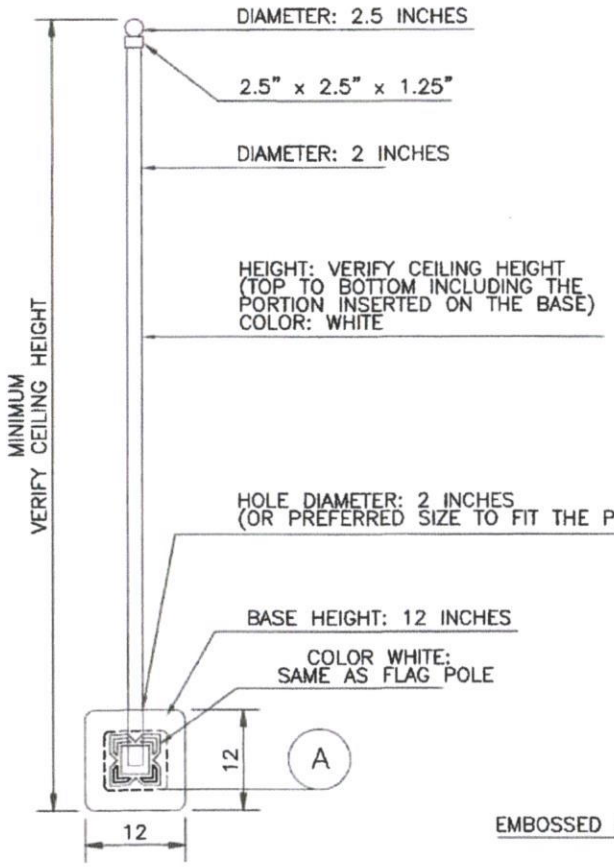

ELEVATION

SPECIFICATIONS:

MATERIAL : WOOD
COLOR. : WHITE
PAINT : SEMI-GLOSS

FLAG MOUNTING INSTRUCTIONS:

GUNTUCKER SHOULD BE USED
WHEN MOUNTING THE FLAG
(DO NOT USE NAIL OR SCREW)

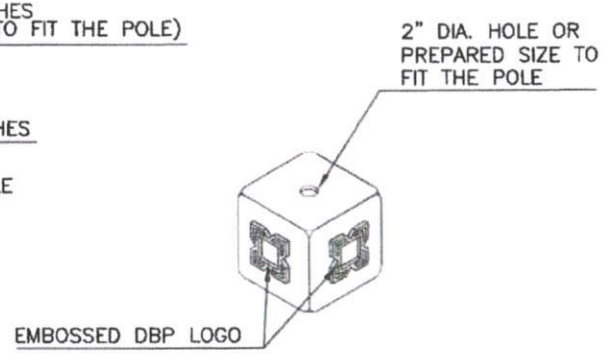

ISOMETRIC

ITEM: PHILIPPINE FLAG

MATERIAL: (FOR INTERNAL DISPLAY)COTTON, DOUBLE EMBROIDERED, BACK TO BACK
(FOR EXTERNAL DISPLAY) SILK MATERIAL
SINGLE OR DOUBLE PATCHING

DIMENSION: 70 INCHES (WIDTH) x 30 INCHES (HEIGHT)

PHILIPPINE FLAG DETAIL

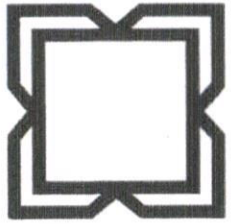

LOGO DIMENSION: 6 INCHES
STRICTLY PERFECT SQUARE ON ALL SIDES

MATERIAL:
0.25 PLYWOOD(SMOOTH)
TO BE ATTACHED AS EMBOSSED IMAGE

LOGO SHOULD BE PLACED ON ALL 4 OF THE
POLE BASE AT EACH CENTER
(HORIZONTALLY & VERTICALLY)

"A" – DBP LOGO DETAIL

DBP We Build Possibilities.	DBP NARRA BRANCH	INTERIOR FLAGPOLE

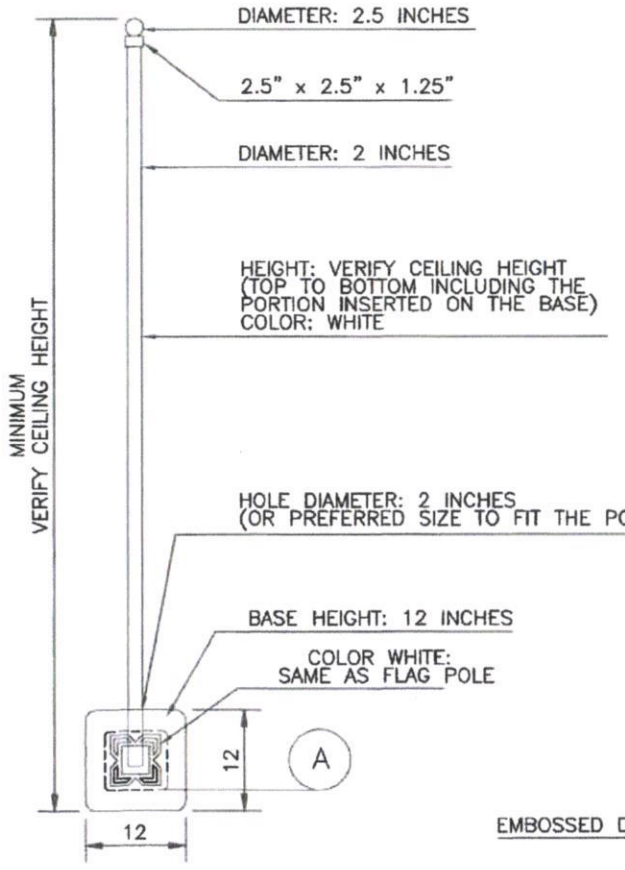

ELEVATION

SPECIFICATIONS:

MATERIAL : WOOD
COLOR. : WHITE
PAINT : SEMI-GLOSS

FLAG MOUNTING INSTRUCTIONS:

GUNTUCKER SHOULD BE USED WHEN MOUNTING THE FLAG (DO NOT USE NAIL OR SCREW)

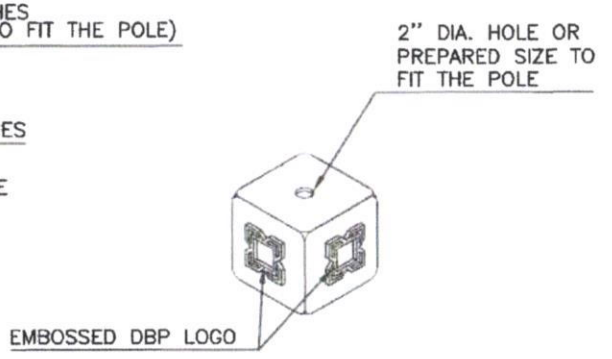

ISOMETRIC

DEVELOPMENT BANK OF THE PHILIPPINES

ITEM:	DBP FLAG
MATERIAL:	COTTON, DOUBLE EMBROIDERED, BACK TO BACK
DIMENSION:	70 INCHES (WIDTH) x 30 INCHES (HEIGHT) (WITH ADDITIONAL: 2.5 IN. – 3 IN, ALLOWANCE AT THE LEFT SIDE TO INSERT FLAGPOLE)
OTHER SPECS:	SUPPLIER SHOULD FOLLOW EXACT PROPORTION AND POSITION OF THE DBP LOGO AND TE SPELLED OUT "DEVELOPMENT BANK OF THE PHILIPPINES" LOGO FOR SPELLED OUT DBP – HELVETICA BOLD (DIGITAL ENLARGEMENT AS GUIDE IS PREFERRED)

DBP FLAG DETAIL

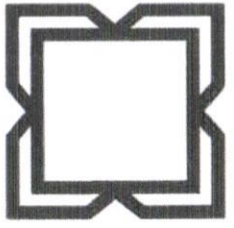

LOGO DIMENSION: 6 INCHES
STRICTLY PERFECT SQUARE ON ALL SIDES

MATERIAL:
0.25 PLYWOOD(SMOOTH)
TO BE ATTACHED AS EMBOSSED IMAGE

LOGO SHOULD BE PLACED ON ALL 4 OF THE POLE BASE AT EACH CENTER (HORIZONTALLY & VERTICALLY)

"A" – DBP LOGO DETAIL

We Build Possibilities.

DBP NARRA BRANCH

INTERIOR FLAGPOLE

MEASUREMENT IN MILLIMETER

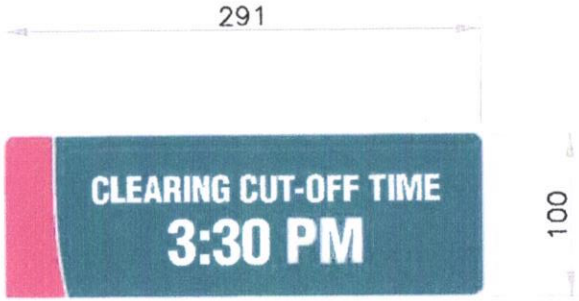

FRONT

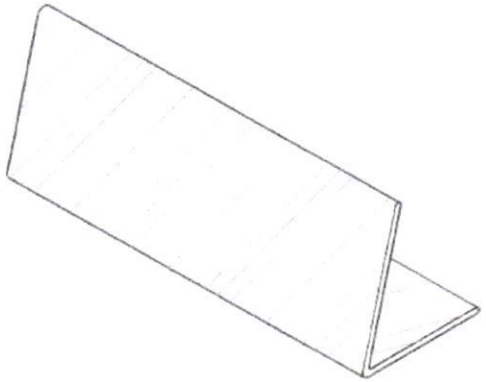

TYPICAL STANDEE ISOMETRIC

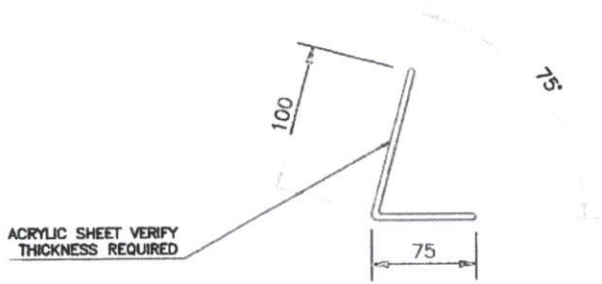

SIDE ELEVATION

SPECIFICATION	3MM THK. ACRYLIC (ROUNDED EDGES) BACK SIDE ACRYLIC PRINTING	COLOR: 3630–157 SULTAN BLUE, 3630–73 DARK RED FONT STYLE: HELVETICA
LOCATION	TELLERS' COUNTER	

DBP We Build Possibilities.	DBP NARRA BRANCH	Signs and Paraphernalia: CLEARING CUT-OFF

ANNEX M

MEASUREMENT IN MILLIMETER

FRONT

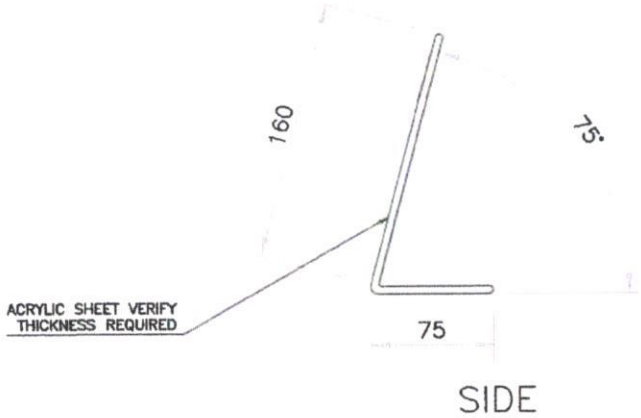

SIDE

SPECIFICATION	3MM THK. ACRYLIC (ROUNDED EDGES) BACK SIDE ACRYLIC PRINTING COLOR: 3630–157 SULTAN BLUE, 3630–73 DARK RED FONT STYLE: HELVETICA
LOCATION	TELLER'S COUNTER

DBP We Build Possibilities.	DBP NARRA BRANCH	Signs and Paraphernalia: PRIORITY LANE

MEASUREMENT IN MILLIMETER

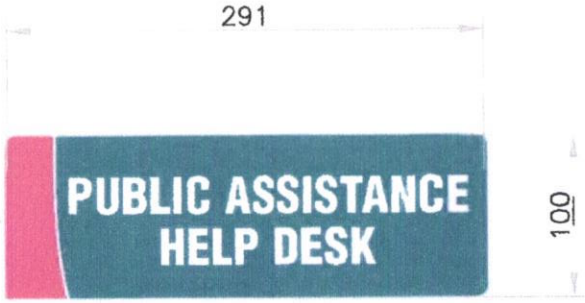

FRONT

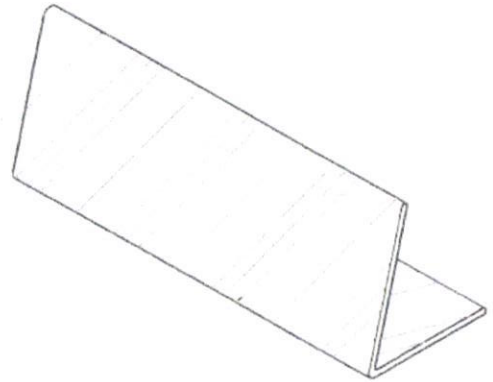

TYPICAL STANDEE ISOMETRIC

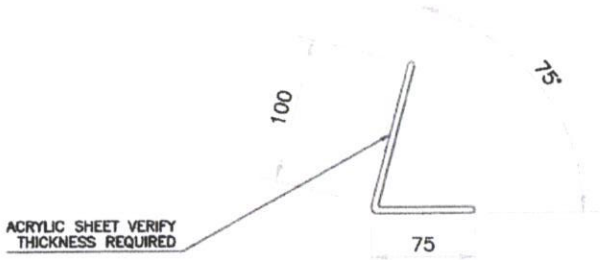

SIDE ELEVATION

SPECIFICATION	3MM THK. ACRYLIC (ROUNDED EDGES) BACK SIDE ACRYLIC PRINTING	COLOR: 3630–157 SULTAN BLUE, 3630–73 DARK RED FONT STYLE: HELVETICA
LOCATION	ADMIN. ASSISTANT	

DBP We Build Possibilities.	DBP NARRA BRANCH	Signs and Paraphernalia: PUBLIC ASSISTANCE STANDEE

MEASUREMENT IN MILLIMETER

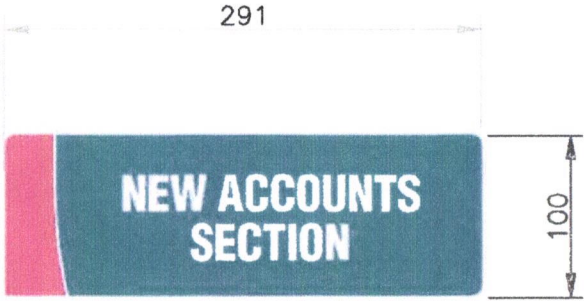

FRONT

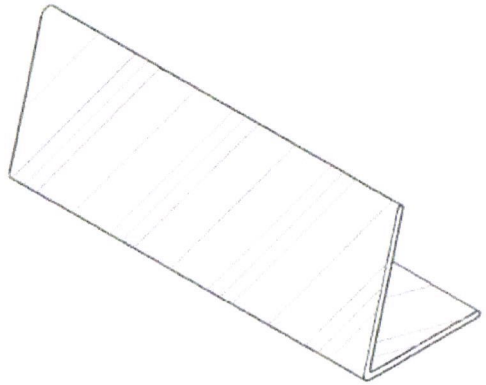

TYPICAL STANDEE ISOMETRIC

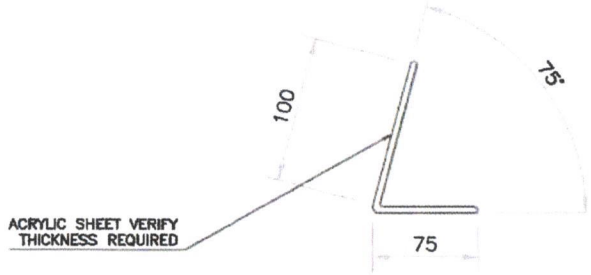

SIDE ELEVATION

SPECIFICATION	3MM THK. ACRYLIC (ROUNDED EDGES) BACK SIDE ACRYLIC PRINTING COLOR: 3630–157 SULTAN BLUE, 3630–73 DARK RED FONT STYLE: HELVETICA
LOCATION	NEW ACCOUNTS COUNTER

DBP We Build Possibilities.

DBP NARRA BRANCH

Signs and Paraphernalia:
NEW ACCOUNTS STANDEE

ANNEX P

MEASUREMENT IN MILLIMETER

FRONT

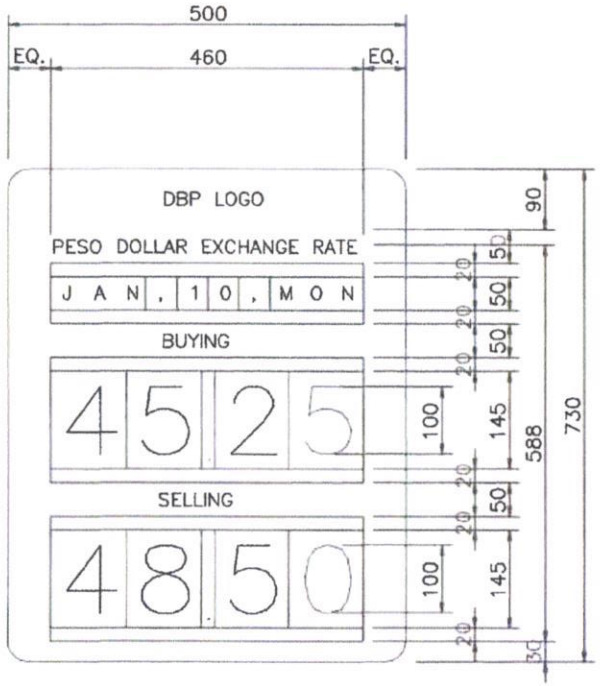

FRONT

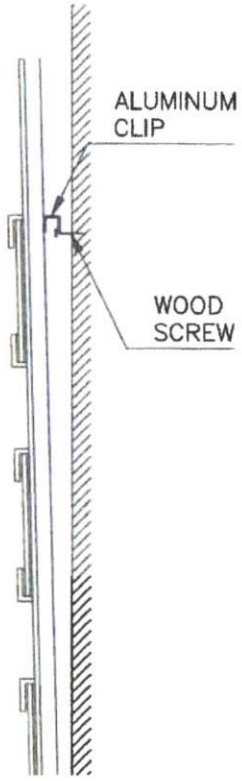

SECTION

SPECIFICATION	WITH DATE AND NUMBER INSERTS PROVIDE ALUMINUM CLIP/SCREW FONT STYLE: DBP FRIZ QUADRATA, HELVETICA
LOCATION	APPLICABLE WALL

We Build Possibilities.

DBP NARRA BRANCH

Signs and Paraphernalia:
FOREX

ANNEX Q

MEASUREMENT IN MILLIMETER

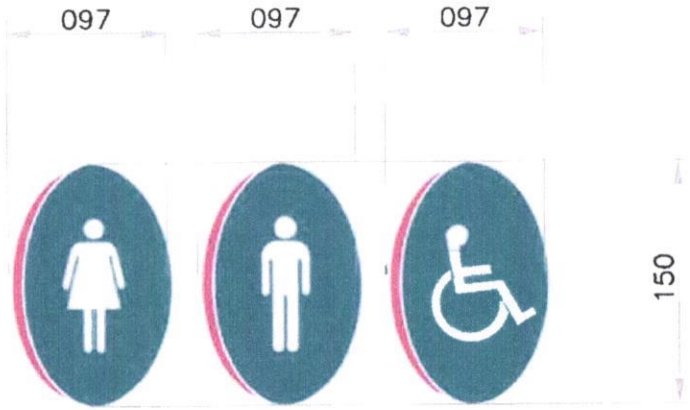

(NOTE: INDIVIDUAL ACRYLIC)

FRONT

SPECIFICATION	3.0MM THK. ACRYLIC (ROUNDED EDGES) BACK SIDE ACRYLIC PRINTING WITH DOUBLE SIDED ADHESIVE TAPE	COLOR: 3630-157 SULTAN BLUE, 3630-73 DARK RED FONT STYLE: HELVETICA
LOCATION	WALL/RESTROOM DOOR	

DBP We Build Possibilities.	DBP NARRA BRANCH	Signs and Paraphernalia: RESTROOMS SIGN (3 ICONS)

MEASUREMENT IN MILLIMETER

FRONT

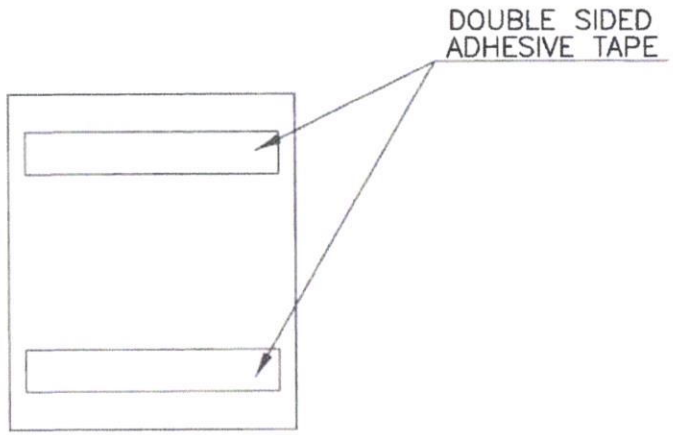

BACK

SPECIFICATION	3MM THK. ACRYLIC (ROUNDED EDGES) BACK SIDE ACRYLIC PRINTING WITH DOUBLE SIDED ADHESIVE TAPE	COLOR: 3630-157 SULTAN BLUE, 3630-73 DARK RED FONT STYLE: HELVETICA
LOCATION	WALL/RESTROOM DOOR	

DBP We Build Possibilities.	DBP NARRA BRANCH	Signs and Paraphernalia: PLEASE CONSERVE WATER

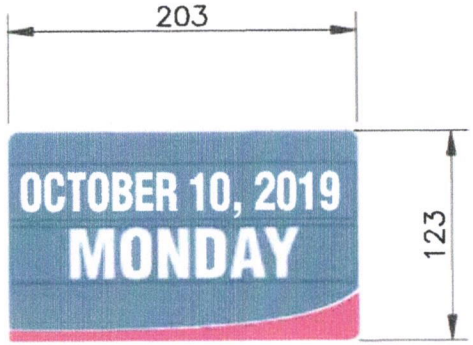

FRONT

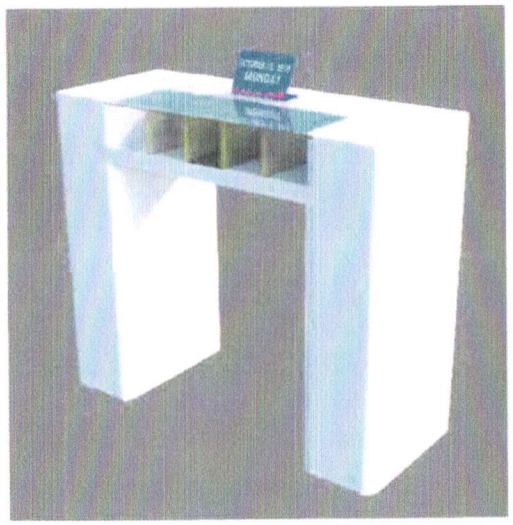

ISOMETRIC

SPECIFICATIONS:

3 MM THK. ACRYLIC (ROUNDED EDGES)
WITH DATE AND NUMBER INSERTS

COLOR: 3630–157 SULTAN BLUE, 3630–73 DARK RED
FONT STYLE: HELVETICA

LOCATION:

SLIP FORM COUNTER

A
DHD–4

DATE BOARD STANDEE

NOT TO SCALE

Signs and Paraphernalia: DATE BOARD STANDEE	DBP DEVELOPMENT BANK OF THE PHILIPPINES	STANDARD DRAWINGS	
		CAD:	SHEET NO. : DHD–4 / PAGE : 95
		CHECKED:	
		DATE:	

ANNEX T

MEASUREMENT IN MILLIMETER

FRONT

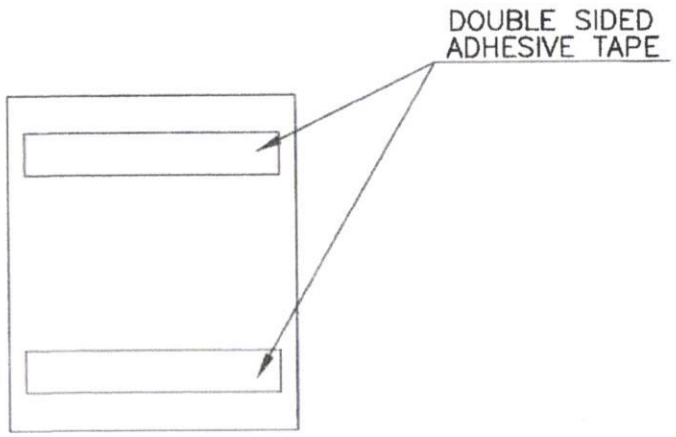

BACK

SPECIFICATION	3MM THK. ACRYLIC (ROUNDED EDGES) BACK SIDE ACRYLIC PRINTING WITH DOUBLE SIDED ADHESIVE TAPE	COLOR: 3630-157 SULTAN BLUE, 3630-73 DARK RED FONT STYLE: HELVETICA
LOCATION	WALL/RESTROOM DOOR	

DBP We Build Possibilities.	DBP NARRA BRANCH	Signs and Paraphernalia: TURN OFF LIGHTS

MEASUREMENT IN MILLIMETER

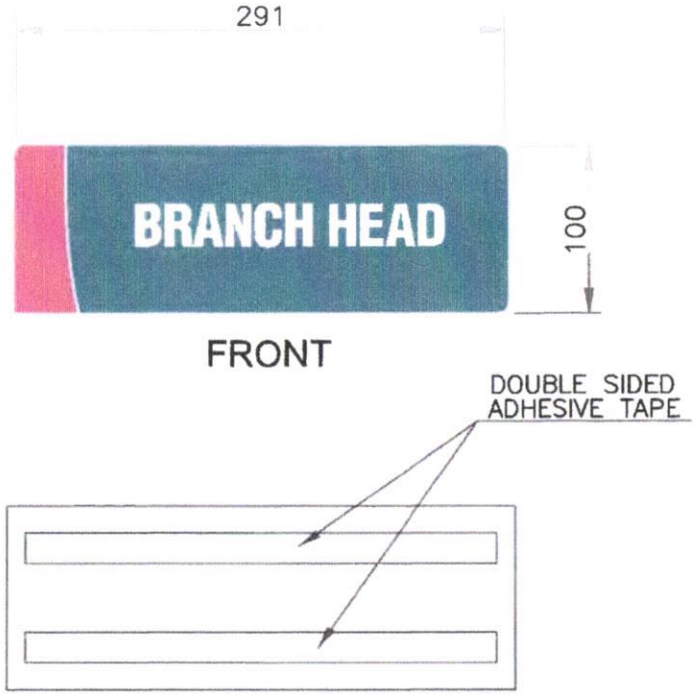

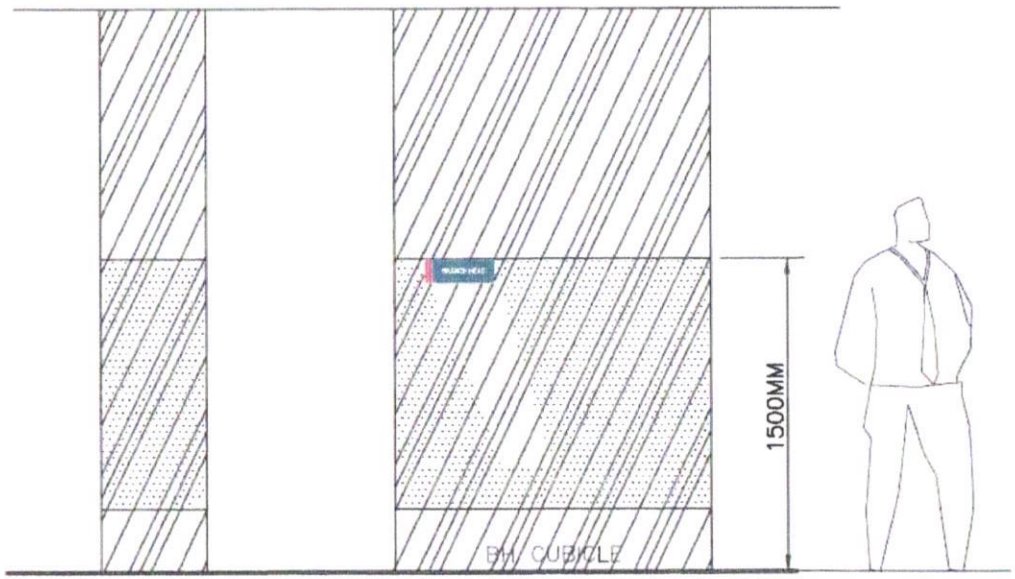

SPECIFICATION	3.0MM THK. ACRYLIC (ROUNDED EDGES) BACK SIDE ACRYLIC PRINTING WITH DOUBLE SIDED ADHESIVE TAPE	COLOR: 3630-157 SULTAN BLUE, 3630-73 DARK RED FONT STYLE: HELVETICA
LOCATION	BRANCH HEAD'S OFFICE	

DBP We Build Possibilities.	DBP NARRA BRANCH	Signs and Paraphernalia: BRANCH HEAD

Omnibus Sworn Statement Form

[Note: The duly accomplished form shall be submitted with the Bid]

REPUBLIC OF THE PHILIPPINES)
CITY/MUNICIPALITY OF _____) S.S.

OMNIBUS SWORN STATEMENT

I, *[Name of Affiant]*, of legal age, *[Civil Status]*, *[Nationality]*, and with residence at [*Address of Affiant]*, after having been duly sworn in accordance with law, do hereby depose and state that:

1. *Select one, delete the others:*

   - *If sole proprietorship:* I am the sole proprietor or authorized representative of *[Name of Bidder]* with office address at *[Address of Bidder]*;

   - *If partnership, corporation, cooperative, or joint venture:* I am the duly authorized and designated representative of *[Name of Bidder]* with office address at *[Address of Bidder]*;

   - *If individual consultant not registered under a sole proprietorship, in case of Consulting Services:* I am the individual consultant or authorized representative of *[Name of Bidder]* with office address at *[Address of Bidder]*;

2. *Select one, delete the others:*

   - *If sole proprietorship:* As the owner and sole proprietor or authorized representative of *[Name of Bidder]*, I have full power and authority to do, execute and perform any and all acts necessary to participate, submit the bid, and to sign and execute the ensuing contract for *[Project Title]* of the *[Name of the Procuring Entity][insert* "as supported by the attached duly notarized Special Power of Attorney" *for authorized representative]*;

   - *If partnership, corporation, cooperative, or joint venture:* I am granted full power and authority to do, execute and perform any and all acts necessary to participate, submit the bid, and to sign and execute the ensuing contract for *[Project Title]* of the *[Name of the Procuring Entity]*, as supported by the attached duly notarized Special Power of Attorney, Board/Partnership Resolution, or Secretary's Certificate, whichever is applicable;

   - *If individual consultant not registered under a sole proprietorship, in case of Consulting Services:* As the individual consultant or authorized representative of *[Name of Bidder]*, I have full power and authority to do, execute and perform any and all acts necessary to participate, submit the bid, and to sign and execute the ensuing contract for *[Project Title]* of the *[Name of the Procuring Entity]*, as supported by the attached duly notarized Special Power of Attorney *for authorized representative*;

3. *[Name of Bidder]* is not "blacklisted" or barred from bidding by the Government of the Philippines or any of its agencies, offices, corporations, or Local Government Units, foreign government/foreign or international financing institution whose blacklisting

rules have been recognized by the Government Procurement Policy Board; by itself or by relation, membership, association, affiliation, or controlling interest with another blacklisted person or entity;

4. Each of the documents submitted in satisfaction of the bidding requirements is an authentic copy of the original, complete, and all statements and information provided therein are true and correct;

5. *[Name of Bidder]* is authorizing the Head of the Procuring Entity or its duly authorized representative(s) to verify all the documents submitted;

6. *Select one, delete the others:*

   - *If sole proprietorship :* The *[Name of Bidder]* and its spouse are not related by consanguinity or affinity up to the third civil degree to the Head of the Procuring Entity, Procurement Agent (if engaged), or the End-User or Implementing Unit, project consultants, head of the Project Management Office, or the members of the Bids and Awards Committee (BAC), the Technical Working Group, and the BAC Secretariat;

   - *If partnership :* The partnership itself and the partners of *[Name of Bidder]* are not related by consanguinity or affinity up to the third civil degree to the Head of the Procuring Entity, Procurement Agent (if engaged), or the End-User or Implementing Unit, project consultants, head of the Project Management Office, or the members of the Bids and Awards Committee (BAC), the Technical Working Group, and the BAC Secretariat;

   - *If cooperative:* The cooperative itself and members of the board of directors, general manager, or chief executive officer of *[Name of Bidder]* are not related by consanguinity or affinity up to the third civil degree to the Head of the Procuring Entity, Procurement Agent (if engaged), or the End-User or Implementing Unit, project consultants, head of the Project Management Office, or the members of the Bids and Awards Committee (BAC), the Technical Working Group, and the BAC Secretariat;

   - *If corporation, or joint venture:* The corporation or joint venture itself, and officers, directors, controlling stockholders and beneficial owners of *[Name of Bidder]* are not related by consanguinity or affinity up to the third civil degree to the Head of the Procuring Entity, Procurement Agent (if engaged), End-User or Implementing Unit, project consultants, head of the Project Management Office, or the members of the Bids and Awards Committee (BAC), the Technical Working Group, and the BAC Secretariat;

   - *If individual consultant not registered under a sole proprietorship, in case of Consulting Services:* The individual consultant and its spouse are not related by consanguinity or affinity up to the third civil degree to the Head of the Procuring Entity, Procurement Agent (if engaged), End-User or Implementing Unit, project consultants, head of the Project Management Office, or the members of the Bids and Awards Committee (BAC), the Technical Working Group, and the BAC Secretariat;

7. It is understood that failure to faithfully disclose its relationship with the Head of the Procuring Entity, members of the BAC, the TWG, and the BAC Secretariat, the head of the PMO or the end-user unit or implementing unit, and the project consultants of the Procuring Entity, or of the procurement agent by consanguinity or affinity up to the third civil degree, as well as its submission of beneficial

ownership information containing false entries shall be subject to blacklisting under Section 100 of the Implementing Rules and Regulations (IRR) of Republic Act (RA) No. 12009, without prejudice to criminal and civil liabilities under applicable laws, including their accessory penalties, if any.

Select one, delete the rest:

- *In case of corporations: [Name of Bidder]* declares its beneficial ownership information consistent with its updated General Information Sheet or Beneficial Ownership Declaration Form or any other document duly submitted to the SEC and has maintained a valid and updated file therein in compliance with Sections 20.2.9.1, 81, and 82 of the IRR of RA No. 12009.

- *In case of Foreign Bidders: [Name of Bidder]* submitted an appropriate equivalent document in English issued by the country of the bidder concerned in accordance with Section 20.2.9.2 of the IRR of RA No. 12009.

8. *[Name of Bidder]* complies with existing labor laws and standards; and

9. *[Name of Bidder]* is aware of and has undertaken the following responsibilities as a Bidder:

   a) Carefully examine all of the Bidding Documents;

   b) Acknowledge all conditions, local or otherwise, affecting the implementation of the Contract;

   c) Made an estimate of the facilities available and needed for the contract to be bid, if any; and

   d) Inquire or secure Supplemental Bid Bulletin(s) issued for the *[Project Title]*.

10. *[Name of Bidder]* did not give or pay directly or indirectly, any commission, amount, fee, or any form of consideration, pecuniary or otherwise, to any person or official, personnel or representative of the government in relation to any procurement project or activity.

11. In case advance payment was made or given to *[Name of Bidder]*, failure to perform or deliver any of the obligations and undertakings in the contract shall be sufficient grounds to constitute criminal liability under existing laws.

IN WITNESS WHEREOF, I have hereunto set my hand this __ day of ___, 20__ at _____, Philippines.

Duly authorized to sign the Bid for and behalf of:

[Insert Bidder's Name]

[Affiant's Signature over Printed Name]
[Position/Designation]
[Date]

JURAT

SUBSCRIBED AND SWORN to before me this _____ day of *[month] [year]* at *[place of execution]*, Philippines. Affiant/s is/are personally known to me and was/were identified by me through competent evidence of identity as defined in the 2004 Rules on Notarial Practice (A.M. No. 02-8-13-SC). Affiant/s exhibited to me his/her *[insert type of government identification card used]*, with his/her photograph and signature appearing thereon, with no. _____.

WITNESS MY HAND AND SEAL this ___ day of *[month] [year]*.

NAME OF NOTARY PUBLIC
Notarial Commission No. _____
Notary Public for _____ until _____
Roll of Attorneys No. _____
PTR No. __, *[date issued], [place issued]*
IBP No. __, *[date issued], [place issued]*

Doc. No. _____
Page No. _____
Book No. _____
Series of _____.

DEVELOPMENT BANK OF THE PHILIPPINES
Head Office: Sen. Gil J. Puyat Avenue corner
Makati Avenue, Makati City, Philippines

Terms and Conditions
[Goods and General Support Services]

1. All prices quoted herein are valid, binding and effective for a period of **six (6) months** from the date of the submission of quotations/proposals.
2. All prices quoted herein are inclusive of VAT and cost of delivery and/or installation.
3. All goods and services for delivery and installation shall conform to the approved **Technical Specifications, Terms of Reference, and Scope of Works,** whichever is applicable.
4. **Terms of Payment.** Payment shall be made upon full satisfactory delivery/installation/performance of the project/s and acceptance of the end-user.
5. **Delivery Schedule.** The goods shall be delivered by the supplier on the date indicated at the Purchase Order from the Bank.
6. **Area of Delivery**: **As stated in the approved Purchase Order/Contract Agreement.**
7. Where the **AWARDEE** fails to effect the delivery within the prescribed period, the Bank may upon its discretion, extend the delivery period subject, however, to the imposition of appropriate liquidated damages, the amount of which shall be at least equal to one-tenth of one percent (0.001) of the cost of the unperformed portion for every day of delay, collectible from any money due or maybe due to the supplier/contractor, whichever is convenient to the Bank. Once the cumulative number of liquidated damages reaches ten percent (10%) of the amount of the contract, the DBP may rescind or terminate the contract, without prejudice to other courses of action and remedies open to it. If the AWARDEE, however, fails to effect complete delivery within the extended period, the Bank shall have the right to cancel said contract and shall constitute grounds for disqualification of the AWARDEE from future biddings, without prejudice to the imposition of other sanctions provided for under Republic Act No. 9184 and its 2016 IRR.
8. Any manufacturing defect shall be corrected by the Supplier.
9. All transactions are subject to withholding of creditable Value Added Tax (VAT), as may be applicable, according to Revenue Regulation No. 10-93.

Conforme:
Signature over Printed Name of the Supplier's Authorized Representative/Designation