REQUEST FOR QUOTATION

The Development Bank of the Philippines, through the Regional Bids and Awards Committee for BBG Southern Luzon, intends to procure the following goods/general support services:

Quantity	Unit of Measurement	Project Description	Approved Budget for the Contracts (ABCs), VAT inclusive
One (1)	Lot	Procurement of Supply, Delivery and Installation of Signages and Tellers Backwall for DBP Narra Branch	PhP 315,593.46

Accordingly, all interested suppliers are invited to submit their Price Quotation using the prescribed DBP Financial Proposal Form together with the following mandatory requirements:

☑ Valid Mayor's/Business Permit
☑ PhilGEPS Registration Number and/or PhilGEPS Certificate of Membership
☐ Annual Income or Business Tax Return *(for Project with ABC above P 500 K)*
[Electronically filed through the BIR Electronic Filing and Payment System (eFPS) could be accepted]
☑ Omnibus Sworn Statement *(for Project with ABC above P 50 K)*
☐ Valid Philippine Contractors Accreditation Board (PCAB) License & Category [Appropriate for the nature and cost of the project] *(Applicable for Infrastructure Projects only)*
☐ Duly accomplished Bill of Quantities *(Applicable for Infrastructure Projects only)*
☑ DBP Terms & Conditions and Technical Specifications/Terms of Reference duly signed by supplier or duly authorized representative
☑ Data Privacy Consent Form

The Bank reserves the right to reject any or all Financial Proposals, to waive any formality therein, and to annul the procurement process at any time prior to contract award without incurring any liability to the affected suppliers. Furthermore, the Bank makes no assurance that a contract shall be awarded as a result of this request.

For further information and details on the requirements, please refer to the attached PhilGEPS Publication.

Thank you.

Bids and Awards Committee Secretariat
Development Bank of the Philippines
Ground Floor DBP Building, Merchan Street,
Barangay IX, Lucena City, Quezon Province, Philippines 4301
Telephone: (02) 8189511 local 1581; (042) 373-0190 Email: slbg@dbp.ph

Bid Notice Abstract

Request for Quotation (RFQ)

Reference Number	12625720
Procuring Entity	DEVELOPMENT BANK OF THE PHILIPPINES - BBG - SOUTH LUZON
Title	Procurement of Supply, Delivery and Installation of Signages and Tellers Backwall for DBP Narra Branch
Area of Delivery	Palawan

Solicitation Number:	2025-010 RFQ	**Status**	**Active**
Trade Agreement:	Implementing Rules and Regulations		
Procurement Mode:	Negotiated Procurement - Small Value Procurement (Sec. 53.9)	**Associated Components**	5
Classification:	Goods	**Bid Supplements**	0
Category:	Signage and Accessories		
Approved Budget for the Contract:	PHP 315,593.46	**Document Request List**	0
Delivery Period:	30 Day/s		
Client Agency:		**Date Published**	26/11/2025
Contact Person:	Dolly Ann de Chavez Llagas Administrative Specialist Ground Floor, DBP Bldg., Merchan St., Lucena City Quezon Province Lucena City Quezon Philippines 4301 63-2-88189511 Ext.1542 63-42-3730297 dadllagas@dbp.ph	**Last Updated / Time**	26/11/2025 00:00 AM
		Closing Date / Time	02/12/2025 17:00 PM

Description

The Development Bank of the Philippines – BBG Southern Luzon, through the Regional Bids and Awards Committee for Southern Luzon (RBAC-SL), intends to procure supply, delivery and installation of signages and tellers backwall for DBP Narra Branch with an Approved Budget for the Contract (ABC) of Three Hundred Thousand Pesos (₱315,593.46).

Interested suppliers/contractors are invited to submit their Financial Proposals, duly signed by their authorized representative/s, on or before the deadline indicated. Submissions must be accompanied by the following mandatory requirements:

1. Valid Mayor's/Business Permit
2. Electronically Filed Income or Business Tax Return (filed through the BIR Electronic Filing and Payment System [eFPS]); or Annual Income or Business Tax Return
3. PhilGEPS Certificate of Registration
4. Omnibus Sworn Statement
5. Valid Philippine Contractors Accreditation Board (PCAB) License and registration for the type and cost of contract (for Infrastructure Projects only)
6. Duly accomplished Bill of Quantities (for Infrastructure Projects only)
7. DBP Terms and Conditions and Technical Specifications/Terms of Reference, duly signed on each and every page by the supplier or duly authorized representative
8. DBP Data Privacy Consent Form

The Bank assumes no responsibility whatsoever to compensate or indemnify any supplier for expenses incurred in the preparation and submission of the Financial Proposal and/or mandatory requirements.

Further, the Bank reserves the right to reject any or all Financial Proposals, declare a failure of bidding, or not award the contract at any time prior to contract award, without thereby incurring any liability to the affected bidder/s.

Line Items

Item No.	Product/Service Name	Description	Quantity	UOM	Budget (PHP)
1	Signages and Tellers Backwall	Supply, Delivery and Installation of Signages and Tellers Backwall for DBP Narra Branch	1	Lot	315,593.46

Created by	Dolly Ann de Chavez Llagas
Date Created	25/11/2025

The PhilGEPS team is not responsible for any typographical errors or misinformation presented in the system. PhilGEPS only displays information provided for by its clients, and any queries regarding the postings should be directed to the contact person/s of the concerned party.

© 2004-2025 DBM Procurement Service. All rights reserved.

DBP FINANCIAL PROPOSAL FORM

For: Development Bank of the Philippines

On behalf of the supplier, the undersigned, declare that:

a. We have examined the Request for Quotation and its attachments (collectively, "RFQ")
b. We, submit the following quotation/s:

Project Description	Approved Budget for the Contracts (ABCs), VAT inclusive	Total Bid Price, VAT Inclusive (in Figures and in Words)	
		Unit Price	Amount
Supply, Delivery and Installation of Signages and Tellers Backwall for DBP Narra Branch	PhP 315,593.46		
TOTAL AMOUNT IN WORDS:			

c. We undertake, if our Quotation/Proposal for the Price is accepted, to deliver the good(s) in accordance with the delivery schedule specified in the Request for Quotation;
d. We agree to abide by this Quotation/Proposal for the Price Validity Period of Six (6) Months from date of opening of Financial Proposals and it shall remain binding upon us and may be accepted at any time before the expiration of that period;
e. Until a formal Purchase Order is prepared and executed, this Financial Proposal, together with your written acceptance thereof, shall be binding upon us;
f. We understand that you are not bound to accept the Lowest Calculated Quotation or any Quotation/Proposal you may receive;
g. We likewise certify/confirm that the undersigned is the duly authorized representative of the supplier and granted full power and authority to do, execute, and perform any and all acts necessary to participate, submit the Financial Proposal, and to sign and execute the ensuing contract for herein project;
h. We acknowledge that failure to sign each page of this Financial Proposal Form, shall be aground for the rejection of our Quotation/Proposal;
i. We acknowledge that we indicated the amount of our total bid price in figures and in words;
j. We acknowledge that Quotations/ Proposals not addressing of providing all of the required items in the Bidding Documents including, where applicable, bill of quantities, shall be considered non-responsive and, thus, automatically disqualified. In this regard, where a required item is provided, but no price is indicated, the same shall be considered as non-responsive, but specifying a "0" (zero) or "-" (dash) for the said item would mean that it is being offered for free to the government, except those required by law or regulations to be provided for. (Sec 32.2.1(a), Rule IX, IRR). It is further understood that to ensure completeness of the quotation/proposal, suppliers must ensure that ALL items, columns or matrices in the prescribed forms are appropriately filled-up and no item. Column, or matrix is left blank; and
k. We understand that any communication sent by DBP to the address/fax number/email address provided below shall be deemed to have been duly received by your firm. On the date and time shown in the transmittal. Any change in the contact details shall be duly communicated to the bank.

_____
Signature over Printed Name of the Supplier's Authorized Representative/Designation

PhilGEPS Registration Number:_____

_____
Name of Company/Business Name

_____
Address

Telephone No. : _____
Cellphone No. : _____
Email Address : _____
Date : _____

DEVELOPMENT BANK OF THE PHILIPPINES

PRIVACY CONSENT FORM
Bids/Procurement

Name of Project	Supply, Delivery and Installation of Signages and Tellers Backwall for DBP Narra Branch

I, _____, *(Address)* _____,
(Contact Number) _____, *(Email Address)* _____ hereby authorize/consent to the processing of personal and other related business information which I voluntarily provided to the **Development Bank of the Philippines (DBP)** and understand, acknowledge and agree to the following specific purposes and terms:

I authorize DBP for ***processing***[1] and using my personal and other related business information, including but not limited to my name, address, contact details, and any other relevant information necessary for the evaluation process.

I understand that appropriate security measures shall be implemented by DBP for the protection of my personal and other related business information and shall be treated confidentially. Similarly, such information shall only be disclosed to authorized personnel involved in the bids and awards process of DBP.

I acknowledge that my personal and other related business information may be retained by DBP for as long as deemed necessary to fulfill the purposes specified/stated in this consent form, or as required by applicable policies, laws or regulations.

I understand that I have the right to access and request correction of my personal and other related business information held by DBP to correct any error and inaccuracy, in accordance with applicable data privacy laws.

I understand that I have the right to withdraw my consent, and request DBP to stop the ***processing*** of my personal and business information which may cease/ terminate/ discontinue the evaluation and other related procurement processes.

I agree that any confidential information obtained during my participation in the bid and procurement procedures shall not be disclosed to any third party other than its intended purpose.

By signing below, I acknowledge that I have read and understood the terms and purposes of this consent form and agree to the ***processing*** of my personal and other related business information as described.

_____
Signature over Printed Name

_____
Date Signed

ADDITIONAL INFORMATION

For inquiries or complaints, you may contact the Development Bank of the Philippines (DBP), Attention to: the **DBP Data Protection Officer or the DBP Customer Experience Management Department**, Sen. Gil J. Puyat Ave. cor. Makati Ave., Makati City, Philippines, Telephone No. (02) 8818-9511 to 20/ (02) 8818-9611 to 20, email: info@dbp.ph.

[1]**PROCESSING** - refers to any operation or any set of operations performed upon personal data including but not limited to, the collection, recording, organization, storage, updating or modification, retrieval, consultation, use, consolidation, blocking, erasure or destruction of data.

Development Bank of the Philippines

PROJECT : SUPPLY, DELIVERY AND INSTALLATION OF SIGNAGES AND TELLER'S BACKWALL FOR DBP NARRA BRANCH
LOCATION : PUERTO PRINCESA NATIONAL ROAD, POBLACION, NARRA IV-B MIMAROPA
SUBJECT : TECHNICAL SPECIFICATIONS

MODE OF PROCUREMENT: SMALL VALUE PROCUREMENT

I. APPROVED BUDGET FOR THE CONTRACT:

THREE HUNDRED FIFTEEN THOUSAND FIVE HUNDRED NINETY-THREE AND 46/100 PESOS – Php 315,593.46 (inclusive of VAT/applicable taxes)

II. TECHNICAL SPECIFICATIONS:

Description	Quantity	Specifications
Sticker Wall (Tellers backwall)	19.17 sq. m	- Refer to Annex A - Verify actual size on site
DBP Logo (interior)	1 set	- Refer to Annex A
Digital Printing on Canvass with Wooden Frame	1 set	- Dimension: - 1.80m (W) x 1.20m (H) - Refer to Annex B - Verify actual design
Horizontal Façade Signage	26.93 sq. m	- Verify actual size on site - Refer to Annex C
Sintra Board - "Temporary Unavailable"	1 set	- Refer to Annex D
Main glass door decals	1 set	- Refer to Annex E
Signs and Paraphernalia - "Authorized Personnel Only"	1 set	- Refer to Annex F
Signs and Paraphernalia - "Fire Extinguisher"	5 sets	- Refer to Annex G
Signs and Paraphernalia - "Open/Closed"	1 set	- Refer to Annex H
Signs and Paraphernalia - "Teller's Counter No. 1" Standee	1 set	- Refer to Annex I
Signs and Paraphernalia - "Teller's Counter No. 2" Standee	1 set	- Refer to Annex I
Signs and Paraphernalia - "Teller's Counter No. 3" Standee	1 set	- Refer to Annex I
Signs and Paraphernalia - "Emergency Exit"	1 set	- Refer to Annex I
Signs and Paraphernalia - "Teller's Are Not Allowed Custody of Passbook" (standee)	1 set	- Refer to Annex J

Signs and Paraphernalia - "Please Count Your Money Before Leaving" (standee)	1 set	- Refer to Annex K
Signs and Paraphernalia - "Clearing Cut-off Time" (standee)	1 set	- Refer to Annex L
Signs and Paraphernalia - "Priority Lane" (standee)	1 set	- Refer to Annex M
Signs and Paraphernalia - "Public Assistance Help Desk" (standee)	1 set	- Refer to Annex N
Signs and Paraphernalia - "New Accounts Section"	2 sets	- Refer to Annex O
Signs and Paraphernalia – Forex	1 set	- Refer to Annex P
Signs and Paraphernalia - "Restrooms" (3 icons)	1 set	- Refer to Annex Q
Signs and Paraphernalia - "Please Conserve Water"	3 sets	- Refer to Annex R
Signs and Paraphernalia - Date Board (with date and number inserts, provide wall hook/screw)	1 set	- Refer to Annex S
Signs and Paraphernalia - "Turn Off Lights When Not In Use"	4 sets	- Refer to Annex T
Signs and Paraphernalia - Evacuation Plan	2 sets	- Refer to Annex U
Signs and Paraphernalia - "Branch Head"	1 set	- Refer to Annex V

III. CONDITIONS OF THE CONTRACT

1. The Supplier shall ensure that the items delivered are in accordance with the specifications required by the DBP. DBP reserves the right to reject delivery if the item/s delivered are found to be defective or do not meet the required specifications/model.

2. DBP may terminate/cancel the Purchase Order (PO)/Notice to Proceed (NTP) when the Supplier fails to deliver, perform and comply with its obligation.

3. **Delivery Period:** The Supplier shall complete supply, delivery and installation of signages and teller's backwall within **thirty (30) calendar days** after receipt of Purchase Order (PO) / Notice to Proceed (NTP).

4. **Point of Delivery:** Puerto Princesa National Road, Poblacion Narra IV-B Mimaropa

5. **Warranty:** The warranty period shall be one (1) year from the date of acceptance of the item/s by DBP.

IV. DOCUMENTARY REQUIREMENTS:

Interested Supplier/s must submit the following documents:

- Proposal/Quotation
- Proof PhilGEPS Registration
- 2025 Mayor's/Business Permit
- Omnibus Sworn Statement
- Secretary Certificate (for Supplier under Partnership/Corporation)
- Signed Request for Quotation (RFQ)

V. PAYMENT:

ONE-TIME, FULL PAYMENT shall be processed after completion of the project subject to submission of following complete documents:

- Project Pictures
- Invoice/Billing Statement
- Certificate of Completion/Acceptance (as applicable)

VI. LIQUIDATED DAMAGES:

Once the supplier fails to satisfactorily complete the works under the contract within the specified contract duration, inclusive of duly granted time extensions, if any, the supplier shall be liable for liquidated damages in an amount equal to at least one-tenth (1/10) of one percent (1%) of the cost of the unperformed portion of the works for every day of delay.

In computing liquidated damages, the DBP shall determine the usability of the project. A project or a portion thereof may be deemed usable when it starts to provide the desired benefits as certified by the targeted End-User or Implementing Units and the DBP.

To be entitled to liquidated damages, the DBP does not have to prove that it has incurred actual damages. Such amount shall be deducted from any money due, or which may become due the supplier under the contract, collected from the retention money or other securities posted by the supplier, or a combination thereof, whichever is convenient to the DBP.

In case the total sum of liquidated damages reaches ten percent (10%) of the total contract price, the DBP may rescind or terminate the contract, without prejudice to other courses of action and remedies available under the circumstances. This does not, however, preclude the DBP in resorting to Termination of Contract under Section 71.4 of the IRR of R.A. 12009.

Recommended by:

SM ERICK M. VALIDO
Officer-In-Charge, CFMD-PCMU
Per Office Order No. 325 dated 14 July 2025

Approved by:

SAVP ALBERTO SANTIAGO A. BERMEJO
Officer-In-Charge, CFMD
Per Sector Order No. 513 dated 20 August 2025

DBP REFERENCE BOOKLET

Supply, Delivery and Installation of Signages and Tellers Backwall for DBP Narra Branch

SPECIFICATIONS :

- MATTE FINISH VINYL STICKER ON 6MM DENT-RESISTANT SINTRA BOARD
- SIZE: 4300MM (W) X 2700MM (H) - VERIFY ON SITE
- FONT FOR "DBP" - FRITZ QUADRATA
- FONT FOR "We Build Possibilities" - HELVETICA REGULAR BLACK
- COLOR CODE:
  - FOR BACKGROUND: 3630-157 SULTAN BLUE
    3630-73 DARK RED
  - COLOR FOR TEXT/FONT: WHITE

DBP LOGO SPECIFICATIONS :

- SEE DETAILS

NOTES :

1. ALL LAYOUT DESIGN IS SUBJECT FOR APPROVAL BY DPB
2. VERIFY ACTUAL MEASUREMENT ON SITE BEFORE FABRICATION/ INSTALLATION
3. OBSERVE PROPER SCALING (IE., TEXT HEIGHT, TEXT SPACING)
4. VINYL STICKER FOR CORPORATE IDENTITY WALL MUST BE COMPUTER PRINTED

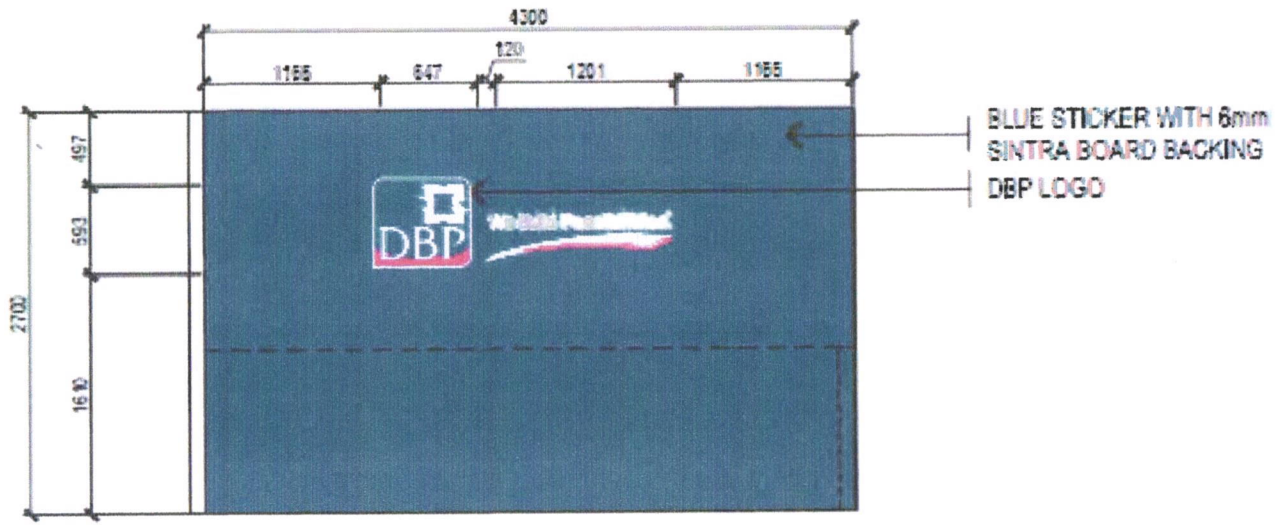

DBP DEVELOPMENT BANK OF THE PHILIPPINES	PROJECT TITLE: **PROPOSED TELLER'S BACKWALL AT DBP NARRA BRANCH** LOCATION: PUERTO PRINCESA NATIONAL ROAD, POBLACION, NARRA IV–B MIMAROPA	RECOMMENDED BY: SM EDWIN C. DIZON OIC, CFMD Per Group Order No. 3363 dated 25 September 2025	APPROVED BY: FVP ZANDRO CARLOS P. SISON HEAD, CAD VP RICARDO JOSEF S. BANDAL OIC, BBS MARKETING GROUP	ISSUE DATE: *September 30, 2025* REVISION DATE: DRAWN BY: *ENGR. A LOSITAÑO* REVIEWED BY: *ENGR. J.DELGADO* *SM E.VALIDO*	SHEET NO: A 1 A-1 OF 2

1. ALL LAYOUT DESIGN IS SUBJECT FOR APPROVAL BY DPB
2. VERIFY ACTUAL MEASUREMENT ON SITE BEFORE FABRICATION/ INSTALLATION
3. OBSERVE PROPER SCALING (IE., TEXT HEIGHT, TEXT SPACING)
4. VINYL STICKER FOR CORPORATE IDENTITY WALL MUST BE COMPUTER PRINTED

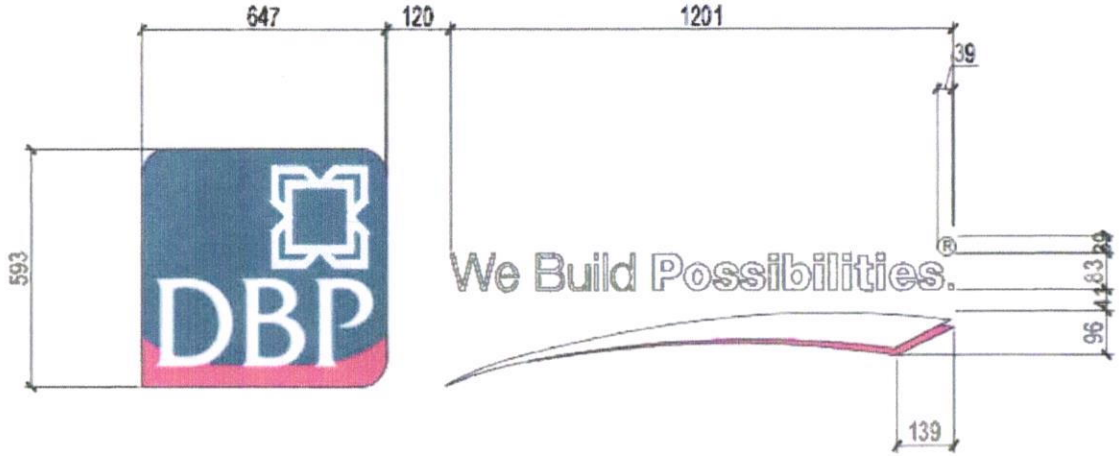

LOGO AND TAG LINE DETAILS

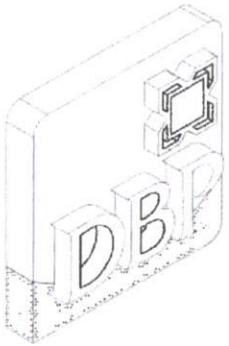

ISOMETRIC VIEW

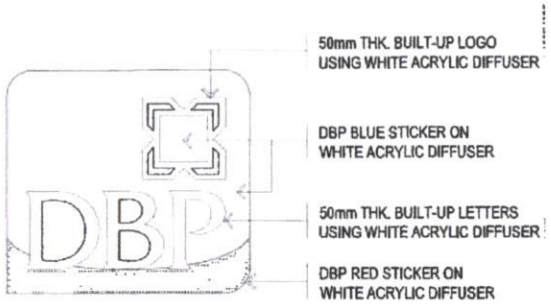

FRONT VIEW

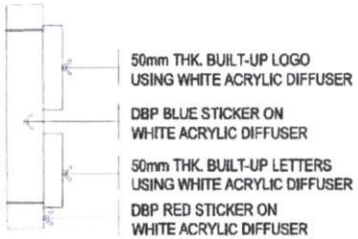

SIDE VIEW

DBP LOGO DETAILS

N T S

	PROJECT TITLE:	RECOMMENDED BY:	APPROVED BY:		ISSUE DATE:	SHEET NO:
DBP DEVELOPMENT BANK OF THE PHILIPPINES	**PROPOSED TELLER'S BACKWALL AT DBP NARRA BRANCH**	**SM EDWIN C. DIZON** OIC, CFMD Per Group Order No. 3363 dated 25 September 2025	**FVP ZANDRO CARLOS P. SISON** HEAD, CAD	**VP RICARDO JOSEF S. BANDAL** OIC, BBS MARKETING GROUP	***September 30, 2025*** REVISION DATE:	A / 2
	LOCATION: PUERTO PRINCESA NATIONAL ROAD, POBLACION, NARRA IV-B MIMAROPA				DRAWN BY: *ENGR. A.LOSITAÑO* REVIEWED BY: *ENGR. J.DELGADO* *SM E.VALIDO*	A-2 OF 2

ANNEX B

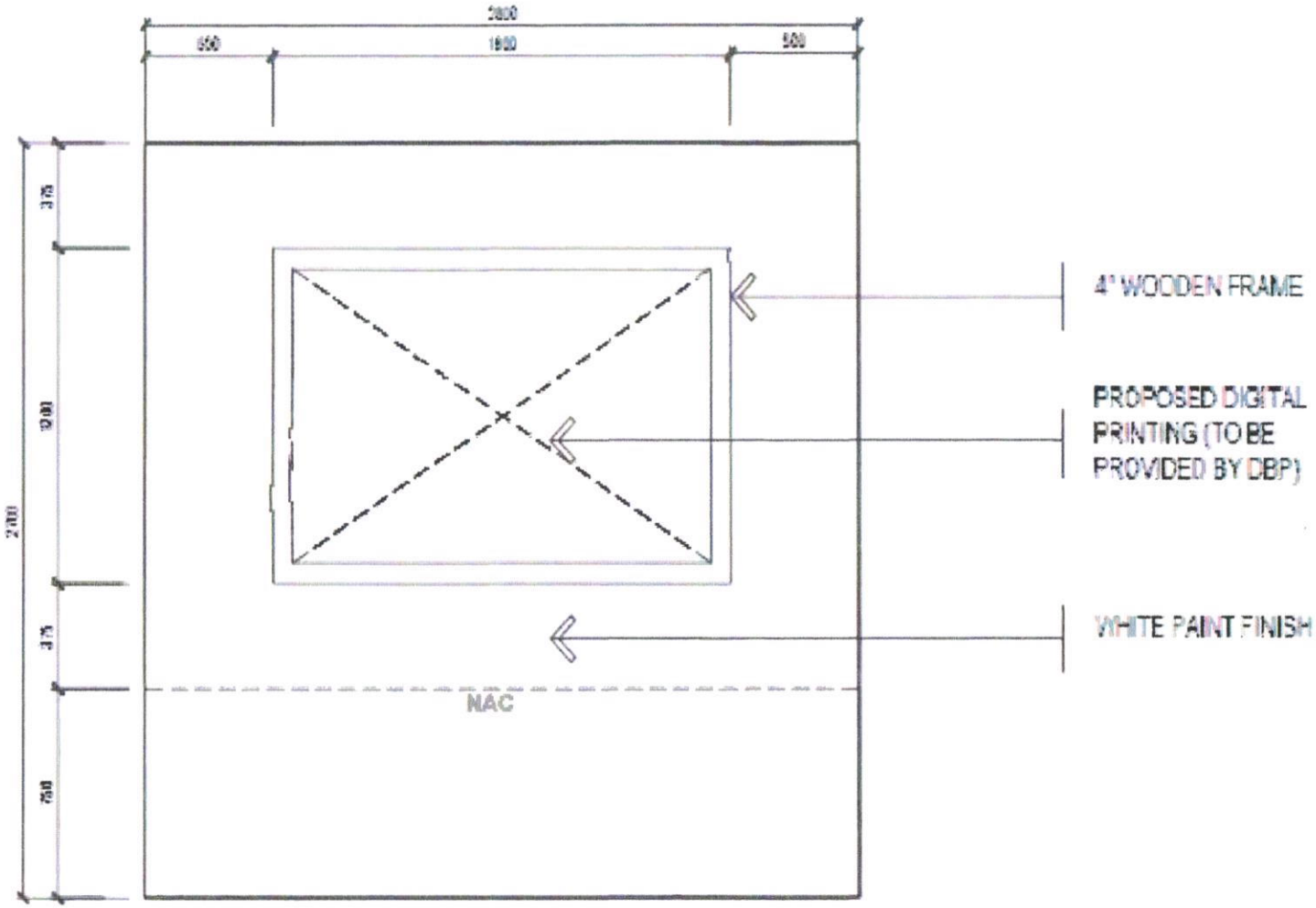

2800
650
1600
500
375
1200
2700
375
750
NAC
4" WOODEN FRAME
PROPOSED DIGITAL PRINTING (TO BE PROVIDED BY DBP)
WHITE PAINT FINISH

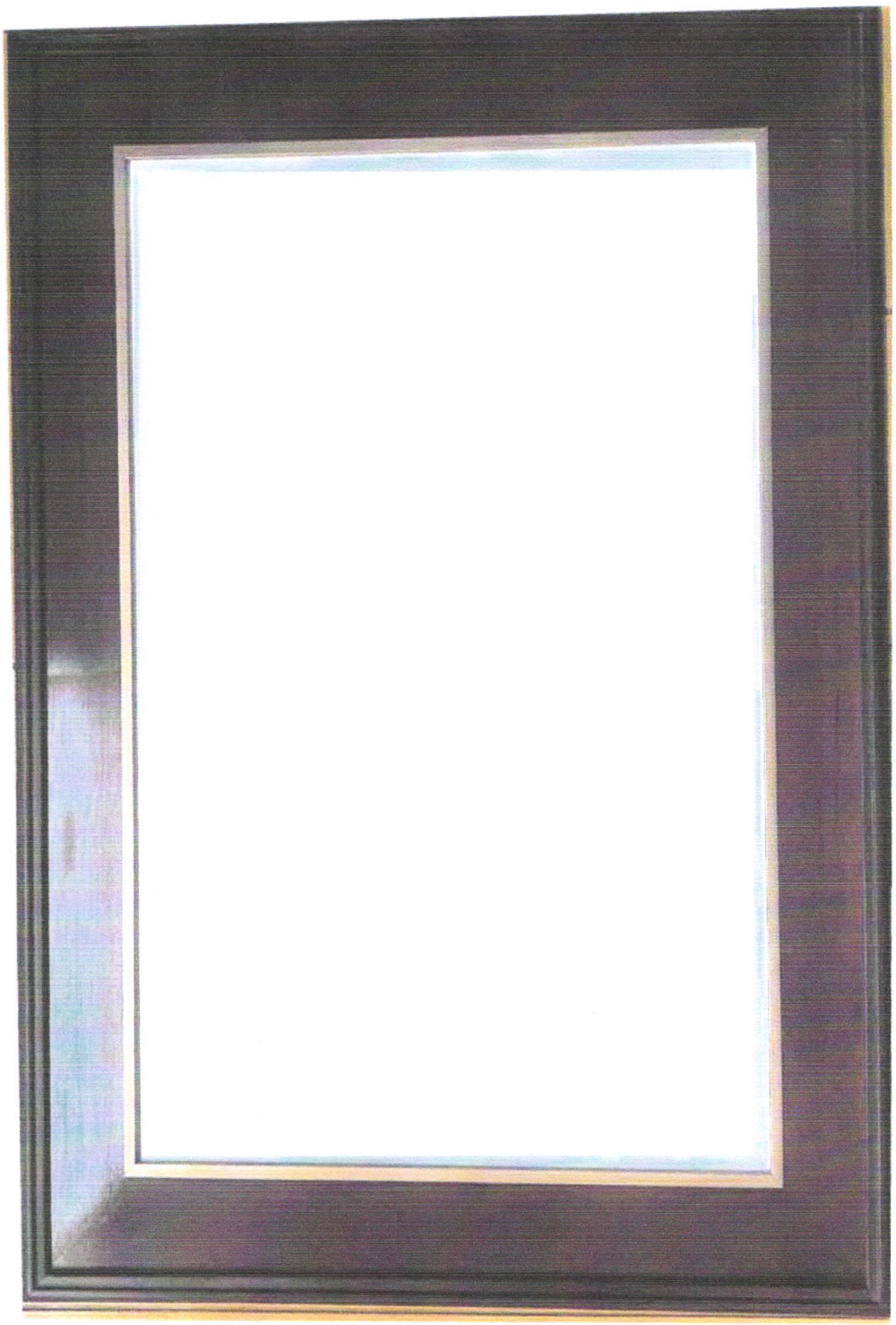

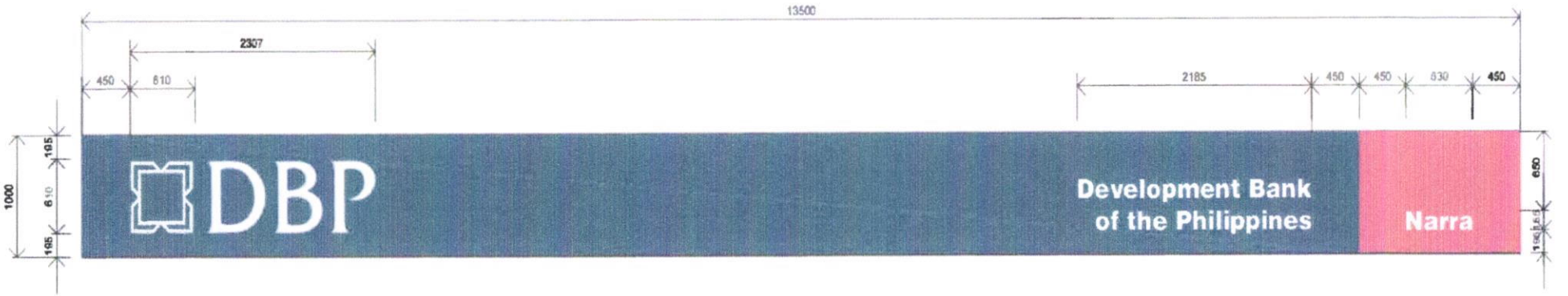

HORIZONTAL FACADE SIGNAGE

SPECIFICATIONS :

- SINGLE FACE LIGHTED SIGNAGE
- SIZE: 13500mm (L) x 1000mm (H) x 200mm (W)
- FLEXIBLE SUBSTRATE WITH TRANSLUCENT FILM STICKER
- COMPLETE WITH LED LIGHTING FIXTURE
- COLOR CODE:
  FOR BACKGROUND: 3630-157 SULTAN BLUE, 3630-73 DARK RED
  COLOR FOR TEXT/FONT: WHITE

FOR 'DBP' .....FRIZ QUADRATA (MEDIUM)
FOR 'Dev't Bank of the Philippines' .....HELVETICA REGULAR, BLACK
FOR 'BRANCH NAME' .....HELVETICA REGULAR, BLACK

NOTE:

- VERIFY ACTUAL MEASUREMENT PRIOR TO FABRICATION
- SIGNAGE SHOULD BE FULLY LIGHTED
- KINDLY OBSERVE PROPER SCALING (I.E. TEXT HEIGHT, TEXT SPACING)
- ALL DECALS FOR THE SIGNAGE SHOULD BE COMPUTER CUT

	PROJECT TITLE:	RECOMMENDED BY:	APPROVED BY:		ISSUE DATE:	SHEET NO:
DBP DEVELOPMENT BANK OF THE PHILIPPINES	HORIZONTAL FACADE SIGNAGE AT DBP NARRA BRANCH LOCATION: Puerto Princesa National Road, Poblacion, Narra IV-B Mimaropa	SAVP ALBERTO SANTIAGO A. BERMEJO CONCURRENT OIC, CFMD Per Office Order No. 513 dated 20 August 2025	FVP ZANDRO CARLOS P. SISON HEAD, CAD	VP RICARDO JOSEF S. BANDAL OIC, BBS MARKETING GROUP	*23 September 2025* REVISION DATE: DRAWN BY: *ENGR. A.C LOSITAÑO* REVIEWED BY: *ENGR. J.E DELGADO* *SM E.V. VALIDO*	A 1 A-1 OF 1

ANNEX D

MEASUREMENT IN MILLIMETER

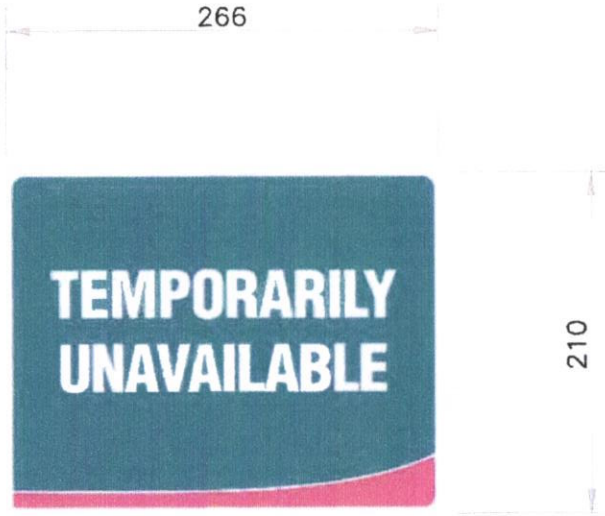

SPECIFICATION	6MM THICK SINTRA BOARD PROVIDE SUCTION CUPS COLOR: 3630-157 SULTAN BLUE, 3630-73 DARK RED FONT STYLE: HELVETICA
LOCATION	ATM SCREEN

DBP We Build Possibilities.	DBP NARRA BRANCH	TEMPORARILY UNAVAILABLE

ANNEX E

MEASUREMENT IN MILLIMETER

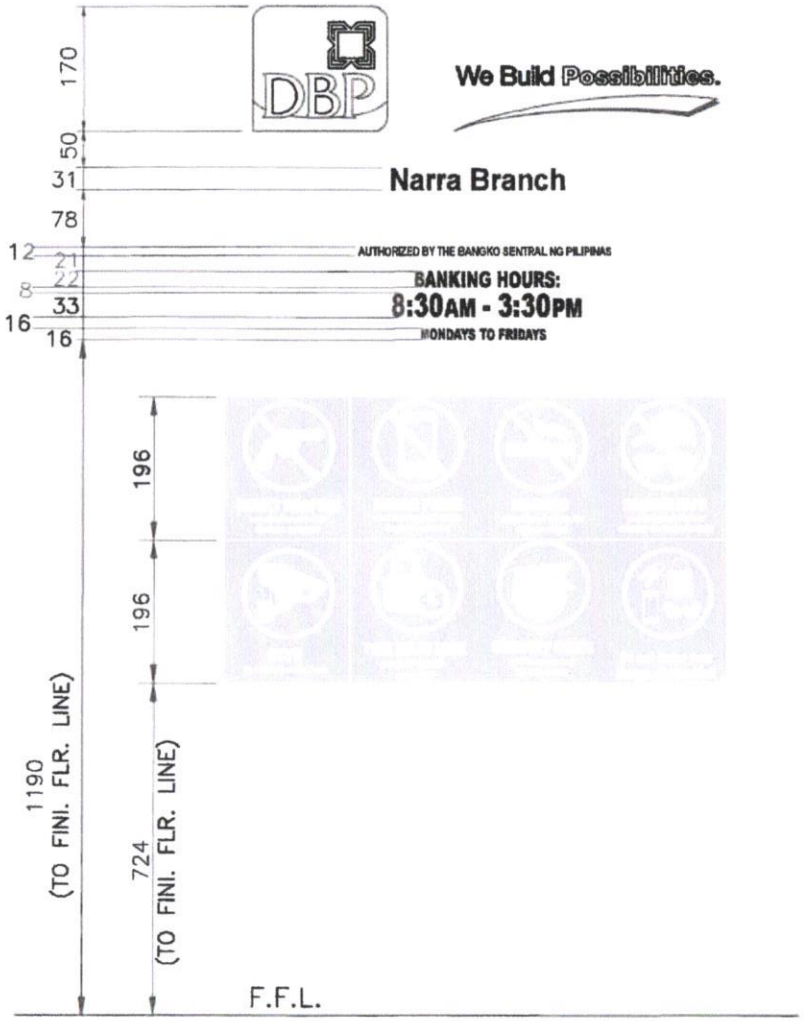

MATERIAL SPECIFICATION

1. DBP LOGO
   COMPUTER-CUT FILM TO BE INSTALLED AT THE FRONT OF THE GLASS DOOR PANEL.

2. COLOR
   A. DBP LOGO – WHITE
   B. ALL DECALS – WHITE

3. FONT
   - DBP – FRIZ QUADRATA
   - We Build Possibilities
     "We Build" – HELVETICA LIGHT
     "Possibilities" – HELVETICA BOLD
   - BRANCH NAME – HELVETICA BOLD
   - AUTHORIZED BY THE BANGKO SENTRAL NG PILIPINAS
     "AUTHORIZED BY THE" – HELVETICA LIGHT
     "BANGKO SENTRAL NG PILIPINAS" – HELVETICA BOLD
   - BANKING HOURS – HELVETICA BOLD

We Build Possibilities.	DBP NARRA BRANCH	ENTRANCE DOOR DECALS

ANNEX E

MEASUREMENT IN MILLIMETER

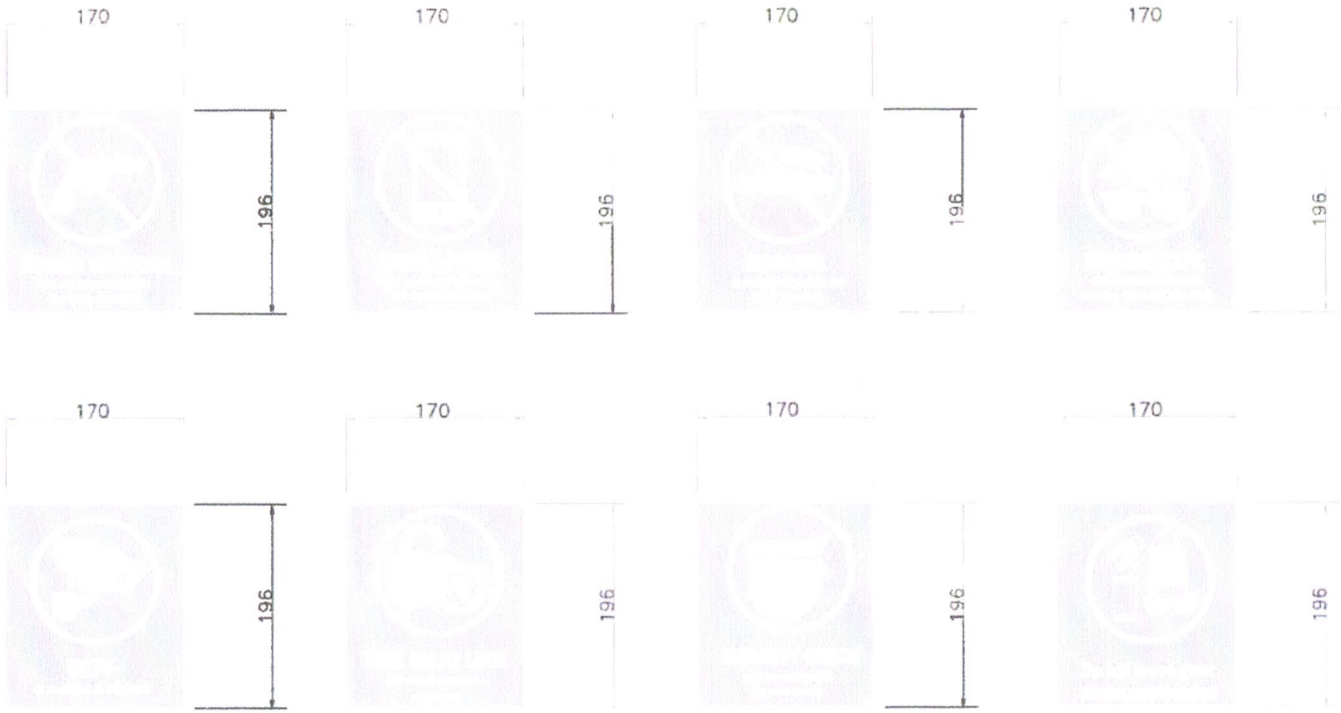

We Build Possibilities.

DBP NARRA BRANCH

ENTRANCE DOOR DECALS

MEASUREMENT IN MILLIMETER

FRONT

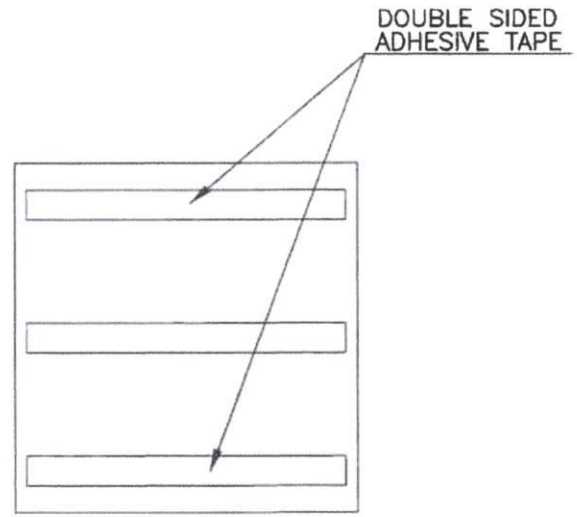

BACK

SPECIFICATION	3.0 MM THK. ACRYLIC (ROUNDED EDGES) BACK SIDE ACRYLIC PRINTING WITH DOUBLE SIDED ADHESIVE TAPE	COLOR: 3630–157 SULTAN BLUE, 3630–73 DARK RED FONT STYLE: HELVETICA
LOCATION	CUBICLE/DOOR	

DBP We Build Possibilities.	DBP NARRA BRANCH	Signs and Paraphernalia: AUTHORIZED PERSONNEL ONLY

FRONT

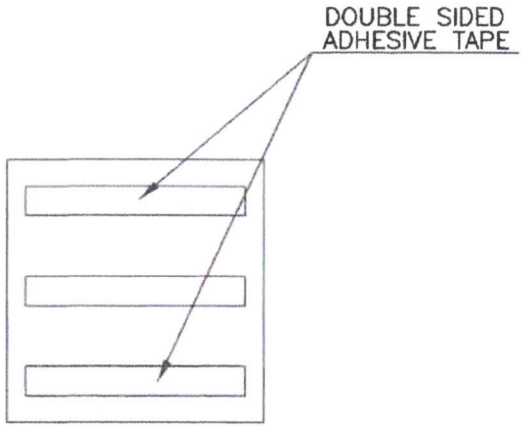

BACK

SPECIFICATION	3.0MM THK. ACRYLIC (ROUNDED EDGES) BACK SIDE ACRYLIC PRINTING WITH DOUBLE SIDED ADHESIVE TAPE	COLOR: 3630-157 SULTAN BLUE, 3630-73 DARK RED FONT STYLE: HELVETICA
LOCATION		

DBP We Build Possibilities.	DBP NARRA BRANCH	Signs and Paraphernalia: FIRE EXTINGUISHER

MEASUREMENT IN MILLIMETER

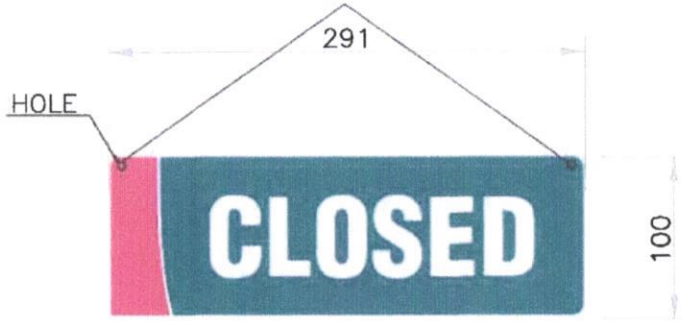

BACK

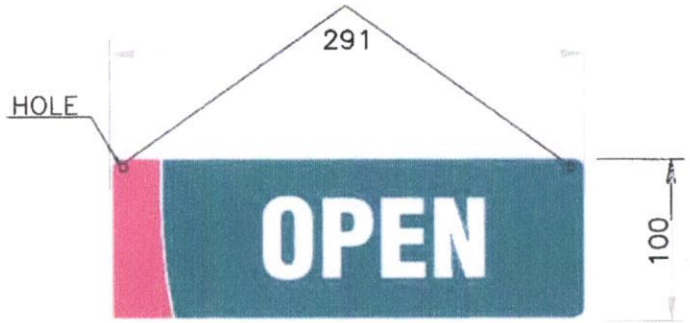

FRONT

SPECIFICATION	3MM THK. ACRYLIC (ROUNDED EDGES) BACK SIDE ACRYLIC PRINTING PROVIDE SUCTION CUP AND CHAIN STRING	COLOR: 3630–157 SULTAN BLUE, 3630–73 DARK RED FONT STYLE: HELVETICA
LOCATION	DOOR ENTRY	

DBP We Build Possibilities.	DBP NARRA BRANCH	Signs and Paraphernalia: OPEN / CLOSE SIGN

ANNEX I

MEASUREMENT IN MILLIMETER

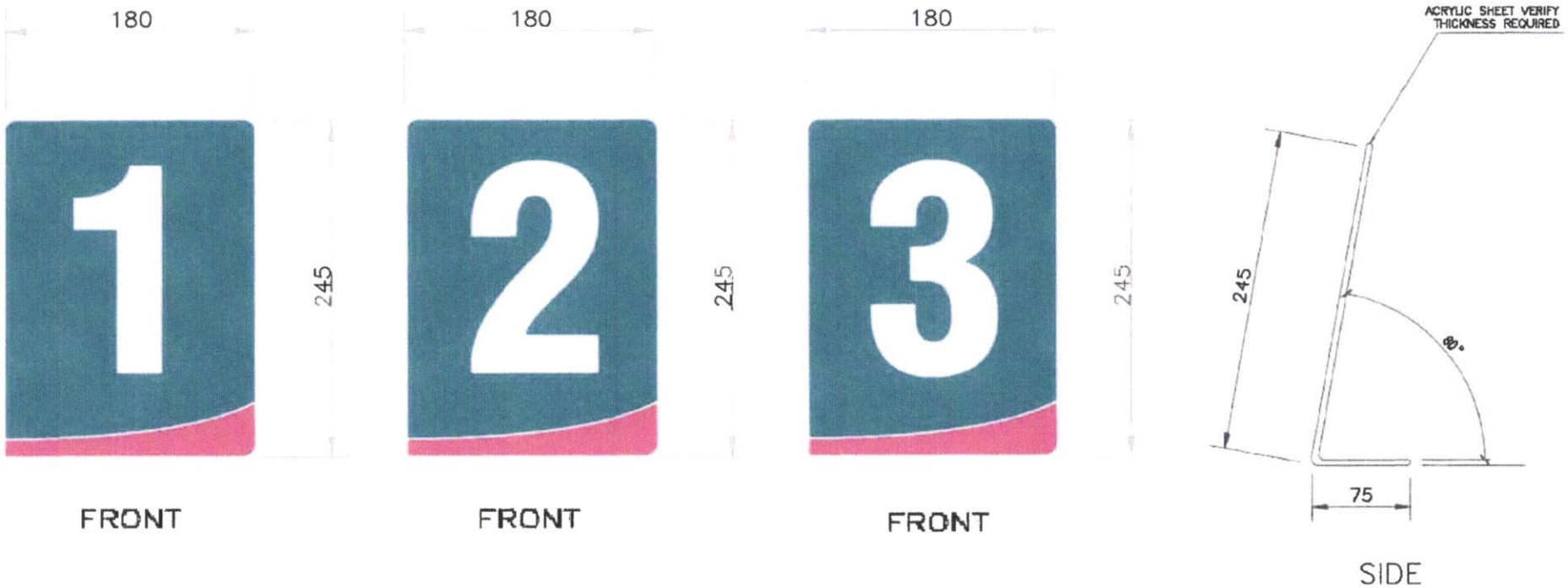

SPECIFICATION	3.0 MM THK. ACRYLIC (ROUNDED EDGES) BACK SIDE ACRYLIC PRINTING COLOR: 3630–157 SULTAN BLUE, 3630–73 DARK RED FONT STYLE: HELVETICA
LOCATION	TELLERS' COUNTER

DBP We Build Possibilities.	DBP NARRA BRANCH	Signs and Paraphernalia: TELLER'S COUNTER NUMBER

MEASUREMENT IN MILLIMETER

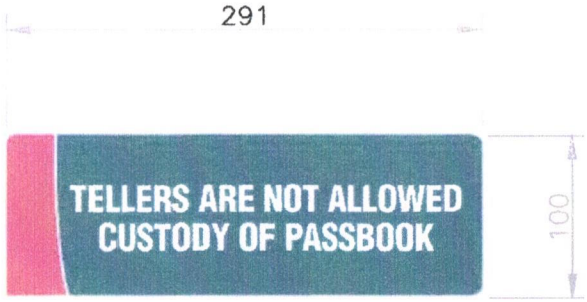

FRONT

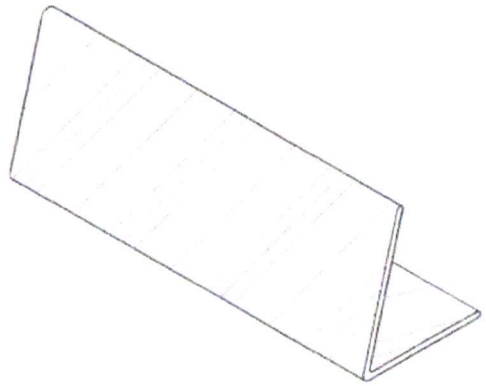

TYPICAL STANDEE ISOMETRIC

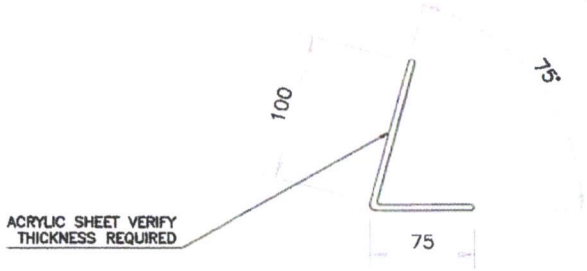

SIDE ELEVATION

SPECIFICATION	3MM THK. ACRYLIC (ROUNDED EDGES) BACK SIDE ACRYLIC PRINTING	COLOR: 3630–157 SULTAN BLUE, 3630–73 DARK RED FONT STYLE: HELVETICA
LOCATION	TELLERS' COUNTER	

DBP We Build Possibilities.	DBP NARRA BRANCH	Signs and Paraphernalia: TELLERS ARE NOT ALLOWED CUSTODY OF PASSBOOK

MEASUREMENT IN MILLIMETER

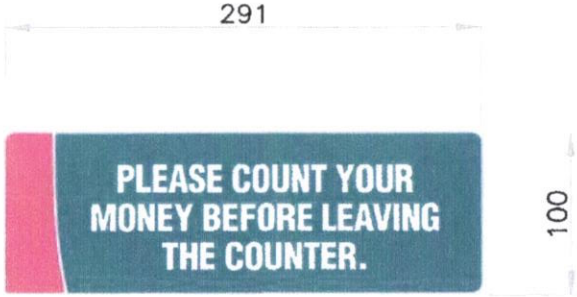

FRONT

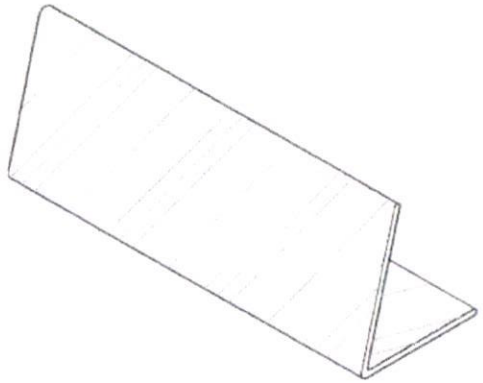

TYPICAL STANDEE ISOMETRIC

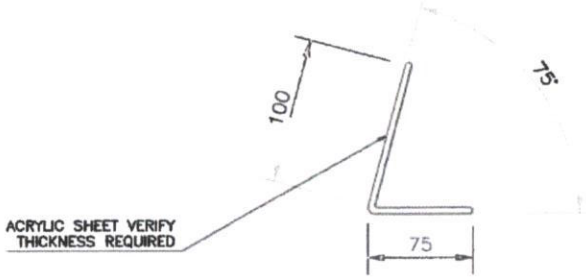

SIDE ELEVATION

SPECIFICATION	3MM THK. ACRYLIC (ROUNDED EDGES) BACK SIDE ACRYLIC PRINTING	COLOR: 3630–157 SULTAN BLUE, 3630–73 DARK RED FONT STYLE: HELVETICA
LOCATION	TELLERS' COUNTER	

DBP We Build Possibilities.	DBP NARRA BRANCH	Signs and Paraphernalia: COUNT YOUR MONEY STANDEE

Omnibus Sworn Statement Form

[Note: The duly accomplished form shall be submitted with the Bid]

REPUBLIC OF THE PHILIPPINES)
CITY/MUNICIPALITY OF _____) S.S.

OMNIBUS SWORN STATEMENT

I, *[Name of Affiant]*, of legal age, *[Civil Status]*, *[Nationality]*, and with residence at [*Address of Affiant]*, after having been duly sworn in accordance with law, do hereby depose and state that:

1. *Select one, delete the others:*

   - *If sole proprietorship:* I am the sole proprietor or authorized representative of *[Name of Bidder]* with office address at *[Address of Bidder]*;

   - *If partnership, corporation, cooperative, or joint venture:* I am the duly authorized and designated representative of *[Name of Bidder]* with office address at *[Address of Bidder]*;

   - *If individual consultant not registered under a sole proprietorship, in case of Consulting Services:* I am the individual consultant or authorized representative of *[Name of Bidder]* with office address at *[Address of Bidder]*;

2. *Select one, delete the others:*

   - *If sole proprietorship:* As the owner and sole proprietor or authorized representative of *[Name of Bidder]*, I have full power and authority to do, execute and perform any and all acts necessary to participate, submit the bid, and to sign and execute the ensuing contract for *[Project Title]* of the *[Name of the Procuring Entity][insert* "as supported by the attached duly notarized Special Power of Attorney" *for authorized representative]*;

   - *If partnership, corporation, cooperative, or joint venture:* I am granted full power and authority to do, execute and perform any and all acts necessary to participate, submit the bid, and to sign and execute the ensuing contract for *[Project Title]* of the *[Name of the Procuring Entity]*, as supported by the attached duly notarized Special Power of Attorney, Board/Partnership Resolution, or Secretary's Certificate, whichever is applicable;

   - *If individual consultant not registered under a sole proprietorship, in case of Consulting Services:* As the individual consultant or authorized representative of *[Name of Bidder]*, I have full power and authority to do, execute and perform any and all acts necessary to participate, submit the bid, and to sign and execute the ensuing contract for *[Project Title]* of the *[Name of the Procuring Entity]*, as supported by the attached duly notarized Special Power of Attorney *for authorized representative*;

3. *[Name of Bidder]* is not "blacklisted" or barred from bidding by the Government of the Philippines or any of its agencies, offices, corporations, or Local Government Units, foreign government/foreign or international financing institution whose blacklisting

rules have been recognized by the Government Procurement Policy Board; by itself or by relation, membership, association, affiliation, or controlling interest with another blacklisted person or entity;

4. Each of the documents submitted in satisfaction of the bidding requirements is an authentic copy of the original, complete, and all statements and information provided therein are true and correct;

5. *[Name of Bidder]* is authorizing the Head of the Procuring Entity or its duly authorized representative(s) to verify all the documents submitted;

6. *Select one, delete the others:*

   - *If sole proprietorship :* The *[Name of Bidder]* and its spouse are not related by consanguinity or affinity up to the third civil degree to the Head of the Procuring Entity, Procurement Agent (if engaged), or the End-User or Implementing Unit, project consultants, head of the Project Management Office, or the members of the Bids and Awards Committee (BAC), the Technical Working Group, and the BAC Secretariat;

   - *If partnership :* The partnership itself and the partners of *[Name of Bidder]* are not related by consanguinity or affinity up to the third civil degree to the Head of the Procuring Entity, Procurement Agent (if engaged), or the End-User or Implementing Unit, project consultants, head of the Project Management Office, or the members of the Bids and Awards Committee (BAC), the Technical Working Group, and the BAC Secretariat;

   - *If cooperative:* The cooperative itself and members of the board of directors, general manager, or chief executive officer of *[Name of Bidder]* are not related by consanguinity or affinity up to the third civil degree to the Head of the Procuring Entity, Procurement Agent (if engaged), or the End-User or Implementing Unit, project consultants, head of the Project Management Office, or the members of the Bids and Awards Committee (BAC), the Technical Working Group, and the BAC Secretariat;

   - *If corporation, or joint venture:* The corporation or joint venture itself, and officers, directors, controlling stockholders and beneficial owners of *[Name of Bidder]* are not related by consanguinity or affinity up to the third civil degree to the Head of the Procuring Entity, Procurement Agent (if engaged), End-User or Implementing Unit, project consultants, head of the Project Management Office, or the members of the Bids and Awards Committee (BAC), the Technical Working Group, and the BAC Secretariat;

   - *If individual consultant not registered under a sole proprietorship, in case of Consulting Services:* The individual consultant and its spouse are not related by consanguinity or affinity up to the third civil degree to the Head of the Procuring Entity, Procurement Agent (if engaged), End-User or Implementing Unit, project consultants, head of the Project Management Office, or the members of the Bids and Awards Committee (BAC), the Technical Working Group, and the BAC Secretariat;

7. It is understood that failure to faithfully disclose its relationship with the Head of the Procuring Entity, members of the BAC, the TWG, and the BAC Secretariat, the head of the PMO or the end-user unit or implementing unit, and the project consultants of the Procuring Entity, or of the procurement agent by consanguinity or affinity up to the third civil degree, as well as its submission of beneficial

ownership information containing false entries shall be subject to blacklisting under Section 100 of the Implementing Rules and Regulations (IRR) of Republic Act (RA) No. 12009, without prejudice to criminal and civil liabilities under applicable laws, including their accessory penalties, if any.

Select one, delete the rest:

- *In case of corporations: [Name of Bidder]* declares its beneficial ownership information consistent with its updated General Information Sheet or Beneficial Ownership Declaration Form or any other document duly submitted to the SEC and has maintained a valid and updated file therein in compliance with Sections 20.2.9.1, 81, and 82 of the IRR of RA No. 12009.

- *In case of Foreign Bidders: [Name of Bidder]* submitted an appropriate equivalent document in English issued by the country of the bidder concerned in accordance with Section 20.2.9.2 of the IRR of RA No. 12009.

8. *[Name of Bidder]* complies with existing labor laws and standards; and

9. *[Name of Bidder]* is aware of and has undertaken the following responsibilities as a Bidder:

   a) Carefully examine all of the Bidding Documents;

   b) Acknowledge all conditions, local or otherwise, affecting the implementation of the Contract;

   c) Made an estimate of the facilities available and needed for the contract to be bid, if any; and

   d) Inquire or secure Supplemental Bid Bulletin(s) issued for the *[Project Title]*.

10. *[Name of Bidder]* did not give or pay directly or indirectly, any commission, amount, fee, or any form of consideration, pecuniary or otherwise, to any person or official, personnel or representative of the government in relation to any procurement project or activity.

11. In case advance payment was made or given to *[Name of Bidder]*, failure to perform or deliver any of the obligations and undertakings in the contract shall be sufficient grounds to constitute criminal liability under existing laws.

IN WITNESS WHEREOF, I have hereunto set my hand this __ day of ___, 20__ at _____, Philippines.

Duly authorized to sign the Bid for and behalf of:

[Insert Bidder's Name]

[Affiant's Signature over Printed Name]
[Position/Designation]
[Date]

JURAT

SUBSCRIBED AND SWORN to before me this _____ day of *[month] [year]* at *[place of execution]*, Philippines. Affiant/s is/are personally known to me and was/were identified by me through competent evidence of identity as defined in the 2004 Rules on Notarial Practice (A.M. No. 02-8-13-SC). Affiant/s exhibited to me his/her *[insert type of government identification card used]*, with his/her photograph and signature appearing thereon, with no. _____.

WITNESS MY HAND AND SEAL this ___ day of *[month] [year]*.

NAME OF NOTARY PUBLIC
Notarial Commission No. _____
Notary Public for _____ until _____
Roll of Attorneys No. _____
PTR No. __, *[date issued], [place issued]*
IBP No. __, *[date issued], [place issued]*

Doc. No. _____
Page No. _____
Book No. _____
Series of _____.

DEVELOPMENT BANK OF THE PHILIPPINES
Head Office: Sen. Gil J. Puyat Avenue corner
Makati Avenue, Makati City, Philippines

Terms and Conditions
[Goods and General Support Services]

1. All prices quoted herein are valid, binding and effective for a period of **six (6) months** from the date of the submission of quotations/proposals.
2. All prices quoted herein are inclusive of VAT and cost of delivery and/or installation.
3. All goods and services for delivery and installation shall conform to the approved **Technical Specifications, Terms of Reference, and Scope of Works,** whichever is applicable.
4. **Terms of Payment.** Payment shall be made upon full satisfactory delivery/installation/performance of the project/s and acceptance of the end-user.
5. **Delivery Schedule.** The goods shall be delivered by the supplier on the date indicated at the Purchase Order from the Bank.
6. **Area of Delivery**: **As stated in the approved Purchase Order/Contract Agreement.**
7. Where the **AWARDEE** fails to effect the delivery within the prescribed period, the Bank may upon its discretion, extend the delivery period subject, however, to the imposition of appropriate liquidated damages, the amount of which shall be at least equal to one-tenth of one percent (0.001) of the cost of the unperformed portion for every day of delay, collectible from any money due or maybe due to the supplier/contractor, whichever is convenient to the Bank. Once the cumulative number of liquidated damages reaches ten percent (10%) of the amount of the contract, the DBP may rescind or terminate the contract, without prejudice to other courses of action and remedies open to it. If the AWARDEE, however, fails to effect complete delivery within the extended period, the Bank shall have the right to cancel said contract and shall constitute grounds for disqualification of the AWARDEE from future biddings, without prejudice to the imposition of other sanctions provided for under Republic Act No. 9184 and its 2016 IRR.
8. Any manufacturing defect shall be corrected by the Supplier.
9. All transactions are subject to withholding of creditable Value Added Tax (VAT), as may be applicable, according to Revenue Regulation No. 10-93.

Conforme:
Signature over Printed Name of the Supplier's Authorized Representative/Designation